HOROLOGICAL TIMES

December 1996



American Watchmakers-Clockmakers Institute

EXPERT CRYSTAL FITTING

SATISFACTION GUARANTEED! Crystal fitting is not a "sideline" with us – our Crystal Department has been fitting crystals for jewelers for over 60 years! No gaps. No "gluey" bezels - just clean, tight fits.

TRY US - YOU WON'T BE DISAPPOINTED!

Waterproof GASKETS

"O" RING Assort.

 # 6043F **$19.95**

Contains 3 each of 30 sizes. Refills available.

FLAT TYPE Assort.

 # 6630 **$29.95**

Contains 3 each of 30 sizes of Flat Rubber gaskets. Refills available.

"MICRO" RINGS

#MM-G10 **$28.50**

60 piece O-Ring gasket assortment for crowns, tubes & buttons. 12 sizes. Refills Available

O-RING GASKETS

 # 50-GOR **$11.95**

Bulk assortment contains 50 pieces.

Thin "O" Rings

#GA144-4 **$19.95**

144 Assorted gaskets for quartz watches
Diameters from 14./5 – 32mm, .40mm thick.

VIGOR® #CE-890 CIRCUIT MAKER®



$7.95

Repairs quartz analog and digital circuitry as well as other fine wire circuits with a minimum of time and effort. Eliminates long drying times. After one minute your item is repaired and ready for use. Kit includes .05 fluid oz. bottle of Circuit Maker® and an applicator, good for numerous repairs.

GENUINE Dumont 3c Tweezers

Compare up to $18.00 **$11.95**



#TWZ227

These high tech tweezers represent a quality unequaled in this price range. Stainless steel, non-magnetic tweezers from the famous Dumon factory are ideal for today's watch repairman.

STOCK UP AT THIS LOW PRICE

Esslinger & Co.

1165 Medallion Drive • St. Paul, MN
1-800-328-0205 • Fax: 1-800-548-9304

HOROLOGICAL TIMES

CONTENTS

VOLUME 20, NUMBER 12
DECEMBER 1996

CLOCKS & WATCHES

18 Music Box Clocks, By Leo A. Jaroslaw
Twelve-Tune Music Box With Six Bells, Part 17

22 Repairing Mechanical Watches & Clocks, By Henry B. Fried
Jeweling, Part 2

30 A Practical Course In Clock Repair, By John P. Kenyon
Making Screws

34 Technically Watches, By Archie B. Perkins
Antique Watch Restoration, Part CXXXII, Adjusting Watches To Temperature

40 Turns For Watch And Clock Making, By Ron DeCorte
Part 2

DEPARTMENTS

2 President's Message
By M.R. "Buddy" Carpenter

4 Questions & Answers
From The Henry B. Fried Library

6 AWI Central News
By William J. Ewbank

8 Ask Huck
By J.M. Huckabee

10 As A Clockmaker Turns
By J.M. Huckabee

14 Pickle Barrel
By Marshall F. Richmond

21 Rock Quarry
By Fred S. Burckhardt

26 Affiliate Chapter Column
By Jack Kurdzionak

33 From The Workshop

50 Industry News

52 Classifieds

56 Advertising Index

EDUCATION

28 Education Update
By James E. Lubic

44 The 1997 Lathe Program
By Roy A. Hovey

48 ETA Courses For Watchmakers For 1997

51 AWI Introduces Watchmakers To Watchmaking For The Twenty-First Century

SPECIAL INTEREST

43 Seeking Prospective Candidates For The AWI Board Of Directors

ON THE COVER: This month's front cover was taken in Southfield, MI by H. G. Ross of H. Armstrong Roberts, Inc.

For an important announcement about spare watch parts, see page 39.

HOROLOGICAL TIMES™

An Official Publication of the American Watchmakers-Clockmakers Institute.

Executive and Editorial Offices
AWI Central, 701 Enterprise Drive, Harrison, OH 45030, Telephone: (513) 367-9800, Fax: (513) 367-1414. Office Hours: Monday through Friday 8:00 AM to 4:00 PM (Eastern Standard Time). Closed national holidays.

Milton C. Stevens: Editor-In-Chief/Publishing Director
Donna Baas: Editor/Advertising Manager
Katherine J. Ortt: Associate Editor
Diane M. DeVillez: Art & Production Director

William J. Ewbank, Executive Director
James Lubic: Education & Technical Director
Nancy L. Wellmann: General Manager
Mary Sansalone: Education Coordinator
Sharon McManus: Membership Coordinator
Nancy Danner: Librarian/Technical Services
Mary Beth Huff: Shipping Coordinator
Debbie Schallick: Clerical Support

Technical Editors

Robert F. Bishop	J.M. Huckabee
James H. Broughton	John P. Kenyon
Fred S. Burckhardt	Archie B. Perkins
David J. Carlson	Robert D. Porter
David A. Christianson	Marshall R. Richmond

AWI Officers
M.R. "Buddy" Carpenter, CMC, CMEW: President
Henry Frystak, CMW: First Vice President
Charles Cleves: Second Vice President
Fred S. Burckhardt: Secretary
James H. Broughton, CMEW, FAWI: Treasurer

AWI Directors
Robert F. Bishop, CMEW, FAWI
Alice B. Carpenter, CMW, CMEW
David A. Christianson, CMW, CMEW
Ewell D. Hartman, CMW, FAWI
Greg Hostetter, CC
Roland R. Iverson, CMC
Gerald G. Jaeger, CMW, CMEW, FAWI
Robert A. Nelson, CMW, CMEW, FAWI
Robert D. Porter, CMW
Marshall F. Richmond, CMW

Jack Kurdzionak: Affiliate Chapter Director
Toby Witherspoon: Research & Education Council Director
Joseph L. Cerullo, CMW, CMC: Immediate Past President

★ Fellows of the Amerian Watchmakers Institute ★

Robert F. Bishop	J. M. Huckabee
James H. Broughton	Gerald G. Jaeger
George Daniels	Robert A. Nelson
*Henry B. Fried	*Hamilton E. Pease
Josephine F. Hagans	Milton C. Stevens
*Orville R. Hagans	*Marvin E. Whitney
Ewell D. Hartman	***Deceased**
Harold J. Herman	

Reprinting and reproduction is prohibited without written permission from the American Watchmakers-Clockmakers Institute. Copyright © 1996 by the American Watchmakers-Clockmakers Institute.

HOROLOGICAL TIMES (ISSNO 145-9546) is published monthly and copyrighted by the American Watchmakers Institute, 701 Enterprise Drive, Harrison, Ohio 45030. Subscription price for the public is $45.00 per year ($4.50 per copy) in the United States and $50.00 per year ($5.50 per copy outside the U.S.), members subscription is $14.63 paid with annual dues of $45.00. Second-class postage paid at Harrison, Ohio. POSTMASTER: Send address changes to *HOROLOGICAL TIMES*, 701 Enterprise Drive, Harrison, Ohio 45030.

PRESIDENT'S MESSAGE

Well, here it is, time to sit down and make out my Christmas lists. You know, people to get gifts for, people to whom I wish to send a Christmas card, and most important, the list of gifts I want to receive. Oh well, I'm not too old to dream, am I?

Now, down to business. Things are getting a little hectic, but exciting, around AWI headquarters. We just moved everything out of the museum, and when I say everything, I mean every single item from the showcases, the clocks off the walls, and even those beautiful (and heavy) glass showcases. We even vacuumed the floor.

In case you are not aware of our problem, I will explain. In our new building the dome over the museum is 29' above floor level. This tall ceiling was not designed to accommodate a Foucault Pendulum; that was decided after the dome was in place. The pendulum was hung and it swings. However, when it gets to its east-west position it continues to swing but simply refuses to rotate through its 360° cycle.

Then we found out why—our dome. Since we've hung the 280-pound pendulum from the dome, the structure moved slightly while the pendulum was in motion. Upon discovering this motion, the builder decided to remove the roofcap and reinforce everything topside. When he saw the beautiful stuff we have in our museum, he asked that we remove everything so as not to chance damaging anything during the construction process.

While packing up and storing the items in the museum I handled each piece, and it finally dawned on me what a marvelous collection of masterpieces we have. We have some of the most gorgeous clocks known to man. As for watches, there is such a wide variety that I cannot begin to describe them all. There are complicated pieces made 200 years before my time by people who must have been geniuses, as well as modern timepieces that are far enough ahead of our time to blow my mind. When we get the museum back together in January, I want each of you to come and see for yourself why I got excited over our possessions.

Oh, by the way, I hope each of you has the best season ever and that God grants you the peace and happiness you so well deserve. Happy Holidays and Happy New Year.



M. R. "Buddy" Carpenter

1722 Madison Avenue
Toledo, Ohio 43624

The Wm. S. McCaw Company

WHOLESALE JEWELRY

Since 1913

Tel 419/243-3720
Fax 419/243-0321



THE EVEREADY "GIVEAWAY"

12 EVEREADY BUNNIES TO BE GIVEN AWAY!!!

EACH TIME YOU PLACE AN ORDER OF $5.00 OR MORE FOR EVEREADY WATCH CELLS, YOUR NAME WILL BE ENTERED IN THE CONTEST. WINNERS WILL BE DRAWN ON DEC. 31,1996

SPECIALS FOR THE MONTH:



364 CELLS	**ON SALE $.20 ea**
377 CELLS	**ON SALE $.22 ea**
379 CELLS	**ON SALE $.24 ea**
395 CELLS	**ON SALE $.26 ea**

ORDER TODAY, ORDER AS MANY TIMES AS YOU WANT, ONE BUNNY PER CUSTOMER.

OHIO WATTS 800-472-0200
NATL WATTS 800-537-0343

JIDA

Wholesale Watch Materials • Tools and Findings • Jewelry • Boxes

AWI

QUESTIONS & ANSWERS

From the Henry B. Fried Library

QUESTION

The enclosed pictures are of a 14 karat yellow gold, 17-jewel pocket watch. Can you please help in identification of the movement? We are interested in the country of origin and date of manufacture. Any other pertinent information would be greatly appreciated. Thank you for your assistance.

Steve P. Pace, Greenville, South Carolina

ANSWER

Your watch seems to have been made by the Columbus Watch Company of Columbus, Ohio.

In the video Robert Deitrich Gruen made for AWI, *The Gruen Family and Their Watches*, Robert Gruen reports that his Grandfather, Deitrich Gruen began the Columbus Watch Company in Columbus, Ohio in 1874. They finished movements that were made in Switzerland. In 1883 Deitrich Gruen and his partner W.J. Savage began to manufacture some movements in the United States. Later, after some financial reversals, Fred Gruen began the D. Gruen & Son Company which was based in Cincinnati, Ohio. Once again they used movements made in Switzerland. The "veri-thin" model became well known in the trade, and they copyrighted the term "Precison" which they alone could use on watches.

The video, *The Gruen Family and Their Watches,* is available on loan from the AWI Library.

Nancy Danner, Librarian, Technical Services





QUESTION

Will you discuss the differences between steel and alloy mainsprings? Specifically, I have been told that alloy is stronger than steel, therefore if a steel mainspring needs to be replaced with an alloy one you need to select an alloy spring with a slightly smaller strength. In my experience, this makes sense especially since I have to correct rebanking problems so often. If this is true, how do you determine which alloy strength will be a suitable replacement for a steel spring? Furthermore, how do you determine if the size specifications (for instance, in the Bestfit book) are given for a steel or alloy mainspring? Related to that point, how do you know if the watch was originally fitted with an alloy spring? I heard that this topic was covered in one of your books. I have three of them and didn't see it anywhere. Please help.

T. G., Wakefield, Rhode Island

ANSWER

The business of alloy versus steel mainsprings has arisen since the 1950 period when Elgin came out with the first such "unbreakable" mainsprings. When the Hamilton Watch Company after paying Elgin royalties, discovered that the formula was generated at the Bureau of Standards and was in the public domain, they quit paying royalties and started on their own researches to improve them. By that time, however, Hamilton and Elgin were no longer in the manufacturing business. Thus Bulova was able and glad to have Bill Bennet, Ernie Drescher, Beehler and Sauter (all from Hamilton) come to their plant in Woodside in Queens, New York.

There, under pressure from Mr. Bulova, they continued their

Continued on page 56.

Borel

For the Best and Latest in Watchmaker's Tools

Borel

Micro Capillary Oiler Set



This is the ideal instrument to oil train wheels pivots in precision watch repair. These oilers allow the correct amount of oil to be placed just where it's supposed to be. Set of 2 oilers, with tips having .004 and .005 inch hole sizes. We recommend the use Moebius synthetic oil reference OL216. Made in the USA exclusively for Borel. **OL375B $ 16.95**

Seiko "Easy Snap" Case Opener

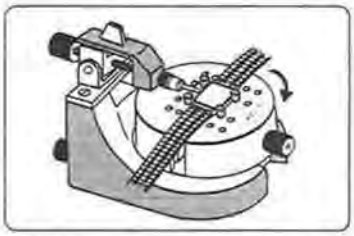

New design by Seiko minimizes scratched cases, scraped movements, and cut fingers. It holds the case in a vise while positioning the opening blade between the case and back. The blade is forced in with a few turns of the knob, always under control, no slipping or scratching. Instructions and a spare blade included. **COS261 $108.55**

Link Pin Remover



Essential for removing pins from metal link bands. Made of black Keltec 11 glass-filled nylon, this unit includes two extra spacers to accommodate all bracelet sizes. The pusher pin is hardened tool steel. Will not scratch or mar gold or silver. **HOL118.00 $ 12.00**

Borel Crown Gauge

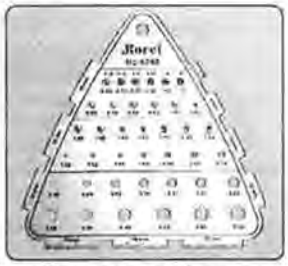

Handy gauge for measuring the thread of windings stems and crowns from .60 to 1.20mm. In addition, crown tube size, and the diameter of tubes, joints, and crowns can be measured. Various sizes of watch case lugs can also be identified. Golden anodized color with black size identification markings. Made in Switzerland. **6740 $ 28.00**



New Witschi Cyclonic

Tests the drive train of analog quartz watches. Frees up hands that are stuck. The Cyclonic supplies a pulse to the stepping motor to check a stopped train without having to open the case. The power of the pulse can be adjusted to be much stronger than normal, restarting hands stopped by a small particle or thickened oil. The speed of the pulse can also be adjusted to be much faster than normal, cleaning or clearing the train. Swatch watches can be jump-started when otherwise they cannot be repaired. Also includes a built in battery tester. Made in Switzerland.
WIT-Cyclonic $295.-

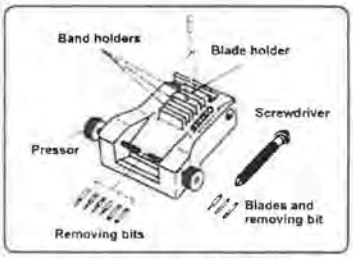

Seiko Multiple Band Sizing Tool

Sizing of various types of bracelets, including the C-ring type which requires much more time to adjust, can be easily made with this tool. Includes instructions. US Patent #5,230,132. **S926 $57.60**



Watch Band Holder

Made of a black durable, non-marring plastic. Four grooves for holding bands of different widths. Made in Switzerland. **HOL115.00 $ 12.50**



Bergeon Hand Gauge

This gauge measures the hole size for hour and minute hands from .30 to 2.00 mm. Bergeon of Switzerland. **30464 $ 30.10**

Borel

Jules Borel & Co.
1110 Grand Avenue
Kansas City, MO 64106-2348

Order Desk **800-776-6858**
Order FAX **800-776-6862**
Local **816-421-6110**

Borel

AWI Central News

By William J. Ewbank

The first and most important part of this month's message to the readership of *Horological Times* is Happy Holidays to you all and Happy Twentieth Birthday to *HT*! That's right. Twelve times a year for twenty years, the Institute has published a high-quality professional journal for its members and many other persons with an interest in horological science. This is an impressive achievement when you consider how many other magazines have come and gone during the last two decades.

We're not about to spend too much time patting ourselves on the back. *Horological Times* is the voice of the American Watchmakers-Clockmakers Institute and is the most visible and tangible member service that we offer. We want to stay relevant to your needs and to continue to provide the sort of magazine that our members want to read. For that reason, the Board of Directors of AWI has in structed the Institute staff to conduct a readership survey of *HT*'s subscribers. Next month's issue will include the survey and return envelope. This is the opportunity for you, the reader, to tell us about the style and content you would like to see in your magazine. We encourage all of you to respond.

Speaking of communications, AWI is now an official website on the Internet. Our home page can be reached through the address http://www.awi-net.org. We are now available on E-Mail and members of the staff can be addressed by name or title. Like most folks venturing onto the information highway for the first time, we have both hands clenched to the wheel and we're not quite certain of our ultimate destination. But, once we get the hang of it, we suspect the ride will be a great experience.

On to other serious matters. By now you are all aware that the Institute is considering seeking some form of legal recourse for American watchmakers and repairers from the restrictive trade practices of some Swiss watch manufacturers. We can announce that the Institute has retained legal counsel to assist in this effort and that President Carpenter has appointed a special task force consisting of Milt Stevens, Chairman; William Ewbank, Executive Director; and James Phillips, an attorney and AWI member, to monitor this situation. It would be the purest speculation at this point in time to discuss the specifics of any possible strategy that may be under consideration. However, we recognize that this is a matter of the greatest interest to the members of AWI and to the watch repair industry in this country. We will make progress reports in future issues of *Horological Times*.

As a final note, the nominating committee for the AWI Board of Directors is preparing to review the credentials of prospective nominees to the Board of Directors for the 1997 election cycle. Candidates to the Board are required by our Constitution to have been members in good standing of the Institute for at least one year prior to the election and to not be associated with any commercial enterprise doing business with members of the Institute. In addition to the constitutional requirements for office, it might be added that a member of the AWI Board of Directors must be a dedicated person willing to volunteer a lot of time to the betterment of the Institute and its membership. The nominating committee consists of Marshall Richmond, Chairman; Alice Carpenter, and Charles Cleves. Qualified applicants can be submitted to the committee at this time.

Seasons Greetings

FROM THE STAFF OF

AMERICAN
WATCHMAKERS-CLOCKMAKERS INSTITUTE

IF IT RUNS ON BATTERIES, IT RUNS ON maxell

FOR DECADES MAXELL HAS STOOD FOR QUALITY RELIABILITY AND INNOVATION



As you know, Maxell is a world leader in the manufacturing of superior quality coin cell batteries. But here's something you probably don't know: Buy 100 SR or CR batteries and we'll give you a free GX-Silver T-120 video cassette. Think of it as further proof that one name is the clear indicator of superior quality: Maxell.

NOW ADD GENEROSITY TO THE LIST



FREE MAXELL GX-SILVER T-120 VIDEO CASSETTE WITH THE PURCHASE OF 100 SR OR CR BATTERIES

To order, call your Maxell distributor today. Offer subject to availability. Maxell Corporation of America, 22-08 Route 208, Fair Lawn NJ 07410. Call 1-800-533-2836 (in NJ: 201-794-5900).

ASK HUCK

By J.M. Huckabee, CMC, FBHI, FAWI

Grooved Escapement Pallets

Q. An American antique clock has grooves worn in the escapement pallets. Should this be polished, replaced, or left alone? The clock is functional.

A. From an antique standpoint, we should keep the piece and make a suitable repair. But be advised this is a falling domino situation. Polish the pallets, and we may find depthing and unequal drops to be our new problem. Replace the anchor and we reduce the antique value, and no repair may give another problem.

If the wear pattern is significant, it forces the escape wheel to "follow a rut" which destroys endshake in the respective components. After the movement is disturbed, by cleaning as an example, the endshake may change and become a bind. This is possibly the making of a "latent stopper."

Sometimes we find the strap-type anchor with enough width that the escape wheel can be moved into an unworn position. This retains the original piece, and has very little effect on escapement adjustments.

When grooves are deep, polishing may require a shape adjustment. Touch the strap backbone with a fine-cut file. If it is hard, you will have a very high probability of breakage. The hard piece can be annealed and adjusted with safety.

It is my opinion that a new pallet should be the last choice, and it too will require some adjustment in most cases.

It looks like we lose no matter what we do. Weigh all the factors and do the job you would be most pleased with in the eyes of your friends who are skilled in our trade.

Worn Lantern Pinions

Q. Is it necessary to replace a worn lantern pinion when the clock is otherwise functional?

A. Let's discuss the consequences of this situation. When the wear is significant, this wheel and pinion wear penalizes endshake freedom in the respective arbors. Once the movement is disturbed by cleaning or repairs, we may be subject to latent intermittent friction sufficient to stop the movement. The two arbors are in a "fixed position" by the wear track in the pinion. It is prudent to replace the pinion if the wear is more than marginally detectable. The consequences are more serious when the wear is in the time train and near the escapement.

Several options are available for correction. Arbor and pinion replacement involves the transfer of a wheel, and possibly adjusting pivot-fit on one or both ends of the arbor. Another method is to move the associated wheel enough that it engages an unworn area of the pinion. Still another option is to replace the pinion wires.

I usually replace the pinion wires. Use stubby-nosed pliers and push the wires out of the pinion. Measure the length for the new wire. Place the wire stock in a lathe collet, and cut a ring at the proper length. Cut off the wire almost completely. Advance the bulk stock and cut again, and until we have a suitable number of pieces. Now insert the piece into a hole and break off. Continue until all positions are filled. The bulk wire serves as a handle to insert the pieces.

The job is completed by a light stroke of a three-sided punch into each shroud hole. Just a slight burr will hold the wires in place. This is a job that turns out well and is not difficult to achieve.

If you have any questions, please write:
"Ask Huck"
c/o Horological Times
701 Enterprise Drive
Harrison, Ohio 45030

Fat Free?



Delicious "Swiss" Chocolates

uh...No.



Quality "Swiss" Batteries

Yes!

Renata Swiss Batteries, like Swiss Chocolates, are always the best. The batteries are fat free. The chocolates are...uh, FREE when you purchase 250 or more Renata "Swiss Quality" Tear Strip or Volume Strip batteries.

And to sweeten the deal, we would also like to offer a FREE Renata "Official Battery Center" Counter Sign *(4 1/2" wide x 2 1/2" tall)* and a fully updated Drawer Label Set for your battery organizer display cabinet.



Several hundred million times a year, the leading names in the watch industry place their trust in Renata. So should you!

We won't run out of batteries - but we will run out of Swiss Chocolates. So, please hurry and order your 250 Renata batteries today!

RENATA
SWISS MADE BATTERIES

IOWA JEWELERS SUPPLY Co., Inc.

3821 Sixth Avenue, Des Moines, IA 50313
(515) 243-3189 Fax (515) 243 3180

1-800-532-1140

© SKS, Inc. 1996 Renata Batteries are not to be taken orally. Limited time offer. Display Cabinet available for $29.00.

As a Clockmaker Turns

Wear and Tear in an Old American Clock

Part III

By J. M. Huckabee, CMC, FBHI, FAWI

Background

Parts one and two of this series related to disassembly and inspection of an old American clock by E. Ingraham of Bristol, Connecticut. That piece, built in the early part of this century, is a classic of that period and badly worn. It is cased in the style known as a "Kitchen Clock." Not a high-value antique, but one the American people know and admire. These are in great demand and vast numbers of them are found in the repair trade.

Our specimen shows evidence of many prior repairs, some of which were not very well executed. This third and last article will finish the escapement bridge replacement, its adjustment, and some pivot bearing work.

A New Pivot Bridge Bearing

The previous article ended with riveting the escapement bridge in place. (See Figures 22-24.) The bridge was drilled to receive a new pivot bearing, more commonly called a bushing. We will begin this work with installation of that bearing.

Let's discuss the objectives of an inserted bearing and how the job is affected. This movement has steel plates. The inserted bearing is made of brass, lathe-turned, friction-fit in place, work-hardened for durability with a suitable oil sink, and an hourglass journal. This is a big order for a piece that is 1/8" in diameter and 0.055" long.

Our part is cut from a piece of 1/8" diameter, drilled with a hole slightly smaller than the associated pivot, and cut to proper length. Held in a #32 collet, and using the magic center locator and hobby knife cut-off tool, the job is no more than three minutes. There is no oil sink, and the piece will just slip through the bridge hole of Figure 25.

Purposely, I did not insert the bearing before the bridge was reaffixed to the front plate. Figure 25 shows a large staking stump I use for this type of work. This is a shop-built tool that is double ended. It can be inverted in the bench block and has another end size. It was lathe-turned from cold rolled steel.

The stump-use idea is shown in Figure 26 with the new bearing loosely in place. Bearing-to-hole clearance is in the order of 0.001"-0.002", nominal for this type of work.

The oil sink is formed, bearing expanded and locked in place, and work-hardened in no more than five seconds. The swage of Figure 27 is also shop-built of bronze; however, mild steel is also suitable. It has a conical tip with an included angle of about 110°.

Hold the swage vertical, centered on the pivot hole, and strike a sharp blow with a two-ounce steel hammer. The job is finished, with the exception of broaching the pivot hole to size. I suggest that those who are unfamiliar with this procedure try an example and then drive the bearing out with a small punch. This will build confidence in the secure friction-fit and simplicity of the job.

Adjusting the Bridge

The bridge was damaged, removed, and re-installed. It may be slightly off position from its original location. That can mean trouble. Some Seth Thomas movements have the escape wheel pinion just behind the wheel. Bridge position change means gear-to-pinion depthing problems. This movement has its pinion near the rear plate. Our concern is mostly the escape wheel position relative to its anchor. Our primary concern is the up-down relationship to the anchor. Follow this order of events.

Adjust bridge to approximately proper endshake in the



Figure 22. A pair of rivets on a handle, and two pivot bearings and bridge.



Figure 26. The lathe-turned bearing drops into a close-fit hole in the bridge.

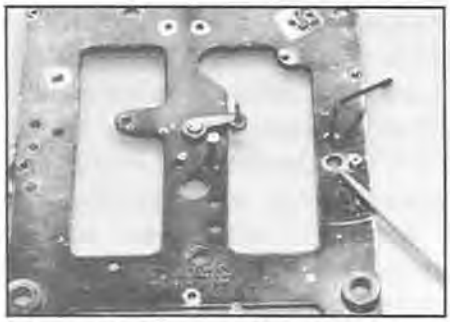

Figure 30. The plate-bearing hole was cut with a drill press. The adjacent bearing will be swage-fit to the hole.



Figure 23. Use the handle for rivet insertion, then break away the handle.



Figure 27. A swage forms the oil sink, expands the bearing, and hardens the material.

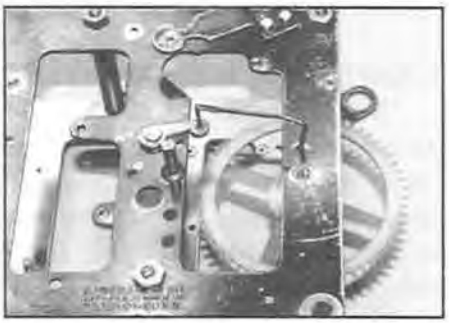

Figure 31. This bearing was also swage-fit into the plate. A spin test is in process.

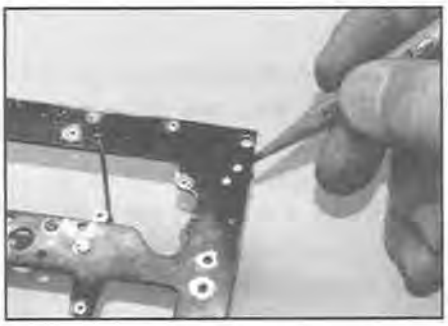

Figure 24. Rivets were upset surface-flush, just as the original pieces.



Figure 28. The bridge is held in a vise to adjust gear train depthing; new bearing indicated.

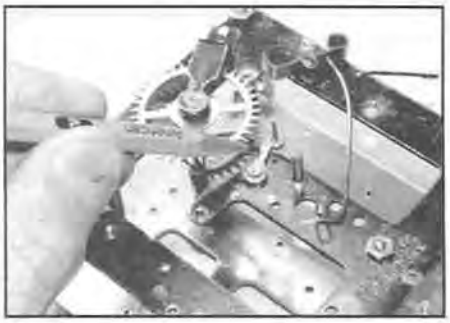

Figure 32. Ready for the escapement anchor. Depthing adjustment is made here.

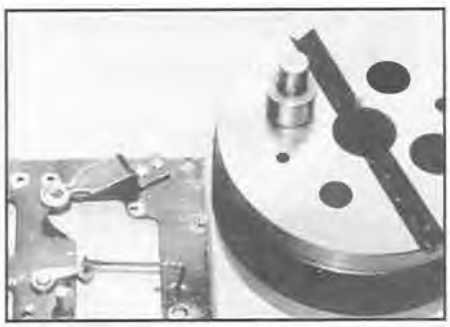

Figure 25. A large stump and heavy bench block will be used to work the bridge bearing.

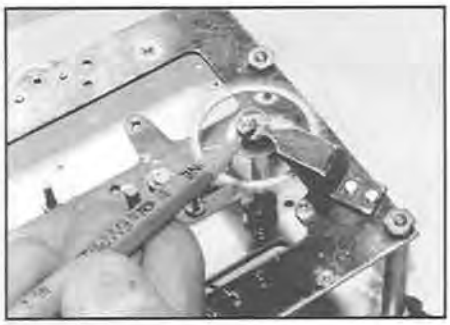

Figure 29. Bearing broached to size, endshake adjusted and wheel given a spin test. Note heads of new bridge rivets.

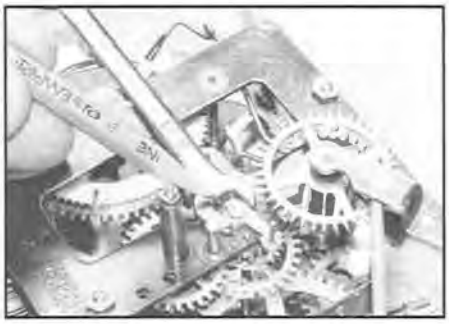

Figure 33. A small wrench will make the anchor depthing adjustment on most old American clocks.

escape wheel arbor. Broach the pivot hole from both sides and assemble the pieces as in Figure 29. Place escapement anchor on its pivot and determine if bridge up-down position is acceptable. (We assume the anchor pivot was in proper location.) If adjustment is needed, study the setup in Figure 28. Rotate plate right or left to make the bridge up-down adjustment. That will reform the bridge in its dog-leg region. Recheck endshake, pivot freedom, etc. as illustrated in Figure 29.

A New Bearing in the Time Train

The second wheel of our time train gets a new bearing in Figure 30. It is made, installed, and adjusted in a similar way to the one in our escape wheel bridge. Both ends of this arbor received a new bearing.

The most common cause of repair failure that comes my way is from new bushings. It is absolute folly to assume that you can hold a clock plate on its edges in pinch-clamps and expect the new bushing pivot hole to be upright every time. Plate-edge small areas are not representative of bearing holes out in the central plate area. I obviate that condition by the technique in Figure 31. Assemble the respective wheel, give it a spin test while you turn the assembly in six positions. Observe the spin time required to stop. Assemble the adjacent wheels and check wheel pinion depthing. These are vital steps, regardless of your bushing method and tools. This will essentially eliminate long test runs and latent stoppers.

Initial Escapement Adjustment

I like to make the initial escapement adjustment before the movement is assembled, typically when it is at the stage depicted in Figure 32. A small wrench will serve as an adjusting tool in many of these old clocks (see Figure 33). Others may need a wrench-like shop-built tool to approach the adjustment from another angle.

For the best text I know on an escapement of this type, look in the Escapement Section of the AWI library for *Questions and Answers for the Clockmaker's Profession*. That material has a section tailored to this specific escapement.

Assembly and In-Case Adjustments

Assemble the movement and mount it in the case. Be sure the strike mechanism is in order. A good text on this subject is found in *The Modern Clock* by Ward Goodrich. This book is widely available through clock material sources.

In-case adjustments involve the dial-fit-to-winding-arbor-holes, hand position and clearance, hammer-to-gong relationship, striker-release-to-hour-marker relationship and beat adjustment.

The striker release adjustment is made with a tool as illustrated in Figure 34. Adjust the release to strike when the minute hand is at the zero minute. It is best to study that adjustment while the movement is disassembled. It is often not tool-accessible in some wheel spoke positions. Knowing exactly how and what to do makes this adjustment of little consequence.

Slip a representative key through the dial winding holes; this helps get the dial-movement-case features in proper relationship.

Conclusion

This ends the three-part series on our old American clock. The procedures used are simple, reliable, and durable. By following the simple inspection steps you can case this movement and get it going with full confidence in your work.

I let down both mainsprings 9-1/2 turns and tested both time and strike operation through one hour of operation. Most of these old clocks use about one turn per twenty-four hours on each spring. This assures me an eight-day run with another day in reserve.



Figure 34. Adjusting the striker release mechanism to sound on the exact hour.



Figure 35. Install dial and hands. Be sure the winding arbors center the key holes.

If you have any ideas to share with the *Horological Times* staff, send your letters to:

AWI Central
701 Enterprise Drive
Harrison, Ohio 45030

SAVE TIME & MONEY

1996

SAVE TIME: **Clean Movements Fast and Effectively with Quartz Clean and PlastiClean**

QUARTZ CLEAN

Quartz Clean has revolutionized the work of hundreds of watchmakers. It is ideal for cleaning quartz movements as well as spot cleaning clock movements. Quartz Clean is a high purity, rapid penetrating solvent which quickly dissolves contaminants and flushes them away. After spray cleaning, simply dry movements with dry filtered air.



QC-16 **$12.95**

PlastiCLEAN

PlastiClean is an effective, inexpensive system for cleaning Plastic Quartz Watch and Clock Movements. PlastiClean's powerful microscopic cleaning action penetrates tiny crevices in the movement, lifting out dry oils and residue. Tested to be completely safe for all PLASTIC Quartz Watch Movements.



QC-PL12 **$23.95**

SAVE MONEY: **Mineral Crystals**

Reduced!

As Low As: 90¢ ea. With order of $15

PART NO.	DESCRIPTION	PRICE
CC-MG	Single Mineral Crystal	99¢
CC-MG25	25 Piece Assortment	$23.00 (95¢ per X-tal)
CC-MG50	50 Piece Assortment	$46.00 (90¢ per X-tal)

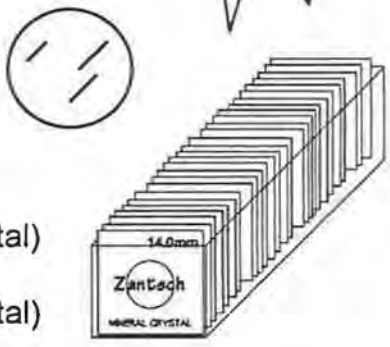

Unlike our competitors, Zantech lets you decide which size crystals you receive in every assortment.

ZANTECH® INC 77 SHADY LANE • TRENTON, NEW JERSEY 08619

ORDERS ONLY (800) 441-7569

TECHNICAL HOT LINE (609) 586-5088

PICKLE BARREL

JEWELRY REPAIR, PART 25

DIAMOND SETTINGS

By Marshall F. Richmond, CMW

Diamond setting is a trade or craft within itself. Most manufacturing jewelers, even though they do mostly jewelry repair for the trade, have classified specialists working in the shop if the shop is a large-scale operation. These specialists include diamond setters, polishers, casting specialists, and jewelry craftsmen. Some larger shops, in addition to hand engravers, even have die cutters to do stamping. Many small shops, especially the ones directly connected to a retail jewelry store, do most of the jewelry repairs and adjustments for their customers as well as servicing the jewelry and watches they sell. Through the years and even today, many retail jewelers learned watchmaking, jewelry crafting and repair, and stone and diamond setting. A few even learned hand engraving. To be a complete diamond setter, knowing hand engraving can be a plus if not essential. One school that I know of with diamond setting in their curriculum requires a course in hand engraving before the student starts the course in diamond setting.

Bead settings, bright cut settings, and pave settings are all set with beads. After the seat is cut and the diamond seated, the diamond is held in with beads. These beads are raised with a round bottom engraver's graver then forced over the edge of the stone with a beading tool, earning the name "bead settings." Lines and ridges are then formed with engraver's gravers. They make bright cuts which are the reason some refer to them as bright cut settings. Pave settings are set the same way except usually many diamonds are set close together like a paved road. These explanations, I have picked up from reading or listening and I feel it is important to pass them on to you.

Figure 1 presents a step-by-step procedure for making a setting, cutting the seat, setting the diamond, bright cutting and milgraining the edge and the ridges left from the bright cutting. This figure shows twelve steps in making a flat setting and setting the diamond. Most diamonds today are set in white gold, sometimes in palladium or platinum, but to get the full brilliance of a diamond it should be set in a white metal. The setting illustrated in Figure 1 is a perfect square but settings can be other shapes like triangular, hexangular, octagonal, oval, and even heart- or pear-shaped. The size and thickness will be determined by the size of the diamond and the amount of space available in the piece of jewelry it is to be used on. Often using a larger setting and bright cutting it will create an illusion and make the diamond appear larger. Manufactured settings called illusion settings are available. We will discuss them later. The thickness of the setting can be determined by the thickness of the diamond, and the width and length of the square can be determined by the diameter of the diamond. The first step is to cut the square from white metal plate and to scribe diagonal lines which intersect to locate the center (see Figure 1a). Next a hole can be drilled (see

Most diamonds today are set in white gold, sometimes in palladium or platinum, but to get the full brilliance of a diamond it should be set in a white metal.

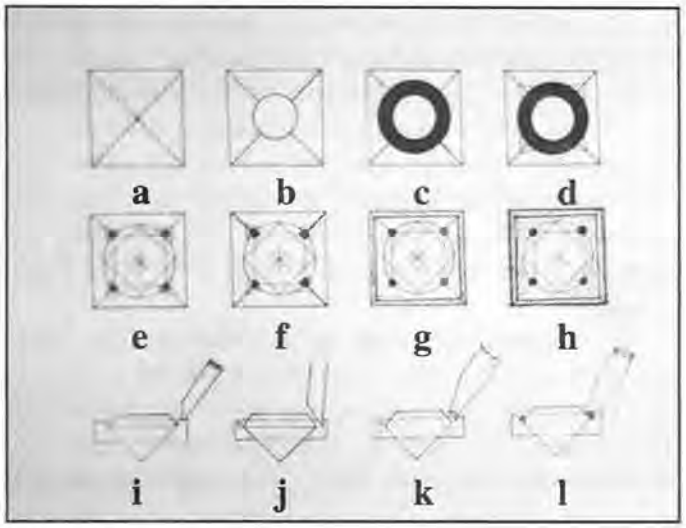

Figure 1.

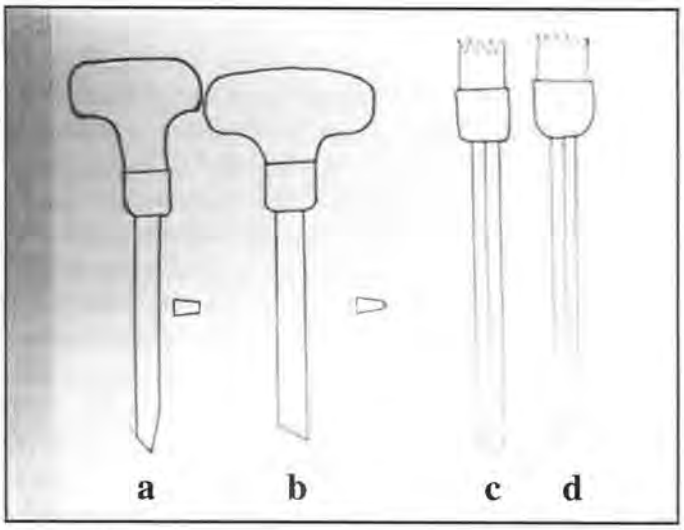

Figure 2.

Figure 1b). I usually make the hole size about 2/3 to 3/4 the size of the diameter of the diamond. Next, choose a setting bur as close to the size of the diameter of the diamond as you can find. It's better to be a little small than a little large. By exerting side pressure, the hole can be enlarged as the bur is rotating. The stone should be a snug fit in the seat and the seat should be deep enough that the girdle is slightly countersunk (see Figure 1c and 1i for depth). Next, scribe small points on each corner at the edge of the diamond seat (see Figure 1d). The next step is to put the diamond in the seat, and then by using a round bottom graver (see Figure 2b) raise the metal at the corners for forming the beads. (See Figures 1i and 1j.) Use the scribe points at the corners as guides. Notice in the illustrations that the round bottom graver pushes up metal and when raised under pressure puts metal over the girdle of the diamond.

Figure 2 shows a variety of gravers: "a" is a flat bottom, "b" is a round bottom, and "c" and "d" are point gravers. Figure 3a shows milgrain tools and handle, "b"

Vibrograf U.S.A., the leading watch equipment supplier, introduces the latest equipment for the professional watchmaker of the '90's...

WATCH-MATIC
Mechanical Watch Timer



LCD Graph Display
Shows Rate, Beat and Amplitude.
Two Year Guarantee.



QUARTZ PLATFORM
Can be added to test quartz and tuning fork watches



SM-8810
Our newest watch water resistant tester features a low-drift detection system that provides the greatest accuracy to-date. Test results can be printed. Pressure-vacuum test to 330 Ft.

Vibrograf has six models of waterproof checkers - one for every budget and need.

Call or write today for our Free Full-Line Catalog



WATCH-MASTER
Quartz Watch Timer & Analyzer
Reasonably priced. Handy instrument. Allows watchmakers to perform most tests recommended by quartz watch manufacturers. Automatic and user friendly.

Serving The Watchmaker For Over 50 Years

THREE PAYMENT PLAN WITH APPROVED CREDIT ~ LEASING PLANS AVAILABLE

For more information, or the name of your local distributor contact:

VIBROGRAF U.S.A. CORP.
504 Cherry Lane, Floral Park, NY 11001
Tel: (516) 437-8700 Fax: (516) 437-8708

Trade-Ins Taken

shows beading tools and handle, and 3c shows a beading block. The next step is to use a beading tool and place it in position (see Figure 1k). Exert pressure with the beading tool starting in the position shown, and while exerting pressure, bring the beading tool to a vertical position forming a bead. Next go to the one across from it and repeat, then do the same with the other two. Be careful not to get any bead too tight so as to sink that side of the diamond out of level. After the beads are formed, and all are over the girdle of the diamond and snug against the edge, use a rocking motion with the beading tool from the starting position to the vertical position. Always move from the one being tightened to the one directly across. This will form a perfect bead.

The beading tool is hollow and highly polished by burnishing, shaping, and reshaping the end by using a beading block (see Figure 3c). The beading block has a series of hardened and polished beads countersunk in the block so that when a beading tool loses its shape during use, the end can be re-formed by finding the correct size bead. Then by using great pressure and twisting the tool, the end will be reshaped and burnished bright so the bead you are forming on a diamond will be properly shaped and burnished bright. Beading tools are not hard tempered so when coming in contact with diamonds they often lose their edge. Edges should be checked frequently when making beads on diamond settings and re-formed on the beading block whenever necessary.

At this point, after checking the setting to see that the diamond is level and tight, it is time to start using a flat bottom graver and cutting away the metal around the stone. See Figure 1g and note that the scribe marks used for locating the beads have been cut away with the flat graver leaving only the beads showing. At this point the flat bottom graver should be resharpened and the bottom of the graver should be polished with 4/0 buff paper. For this process I used a piece of glass about 1/4 the size of a sheet of the buff paper, and cemented a piece of the buff paper to it with mucilage. Then by rubbing the bottom of the sharpened graver on the buff paper, mirror finish will be produced. When the graver makes a cut in the setting it leaves a mirror finish which is called a bright cut. This can be bright cut to the edge leaving a sharp top edge all around the setting which can then be made into a milgrain edge using the milgrain tool (see Figure 3a). The milgrain tool has a small wheel with dome depressions all around it. The tool is rolled over the edge of the setting under pressure which leaves a series of beads all around the edge of the setting. If the setting is much larger than the diamond, a second ridge can be left inside the first one. It can also be milgrained thus leaving a double milgrain edge around the diamond. As the bright cuts are probably brighter than can be polished with rouge, it is not necessary to polish this setting unless there are some rough edges. If the setting needs polishing it can be done with the polishing motor and a bristle brush using tripoli and rouge. A soft cotton buff wheel with rouge also makes a good finish. After finishing, a cleaning in an ultrasonic tank or with a washout brush and a soap and ammonia solution or commercial cleaner does an excellent job. The piece can then be dried with heat or live steam if it is available.

There are many manufactured flat settings which can be bought by only the plate or the head, as well as complete rings. Illusion settings make a diamond look larger than it actually is. (See Figures 4-1 and 4-2.) These can be ordered by fraction of a carat size such as 1/16, 1/8, 3/16, 1/4, 1/3, 1/2, etc. Some catalogues list by points. Every findings manufacturer makes several types of illusion mountings—some for ladies rings, some for gents rings and others for pendants and bracelets.

Figures 4-1 and 4-2 show two types of illusion heads which are also pinpoint settings with the prongs or beads already formed, making diamond setting quick and easy. Figure 4-3 shows a setting for a marquise-cut diamond, 4-4 shows one for a pear-shaped diamond, 4-5 and 4-6 show settings for heart-shaped diamonds. You will notice that Figure 4-5 is more secure than 4-6 because it has a "V" for the point to rest in and is then bent over the stone to make it more secure.

Due to the time saved in setting diamonds, whether using complete heads or top plates for both ladies and gents rings, the use of manufactured settings is the most practical because sawing, filing, and hand engraving are almost eliminated.

In almost all stone setting operations, gravers are a necessity. One must learn how to use and maintain them. They must be kept sharp and the angle of the point maintained when they are sharpened. Different widths, the shape of the bottom, or whether the bottom is lined must be considered when sharpening and polishing the gravers. The gravers are tempered very hard. If the point is too sharp for cutting some work-hardened metals, the point edge will break. When the edge comes in contact with a diamond it could possibly chip the diamond. A round bottom graver works better for me if it is a little more blunt than a flat bottom graver. I use an "India" oilstone which is called a combination stone. It has a coarser grit on one side for the rough sharpening. A hard "Arkansas" stone is used for finish sharpening. This leaves almost a mirror finish. I use the 4/0 buff paper on the bottom of the flat graver. After sharpening on the "India" oilstone and before finishing the sharpening on the hard "Arkansas" stone, I always jam the point into a piece of hardwood. This will remove any microfine wire edge that may be on the edge of the point. Use a lubricating oil on the stones while you are

rubbing the stone to sharpen. This makes the stone cut better because it keeps metal particles from imbedding in the stone. These particles can cause the graver to slide over them without removing any metal, which is necessary to make the graver sharp.

Graver sharpeners are available from your material and tool supplier. There are two different types. One works on a roller that rolls on the stone. The angle can be changed by lengthening and shortening the protrusion of the graver through the seat that holds it. The other is a holder with an adjustable hold that can be set at any angle needed to make the graver sharp while rubbing on an oilstone, and without losing the angle of the graver point. Only the graver touches the oilstone as the sharpening holder is rubbed on the surface holding the oilstone. This should be a hard surface such as Formica or glass.

The next article will continue with a discussion on diamond settings and methods used for setting diamonds. All of my discussions are based on my own personal experience and the methods that work for me. There are many other methods for accomplishing the same result. Some may work better for you. So when working, use the methods you are most comfortable with and turn out the best quality of work you can in the least amount of time.

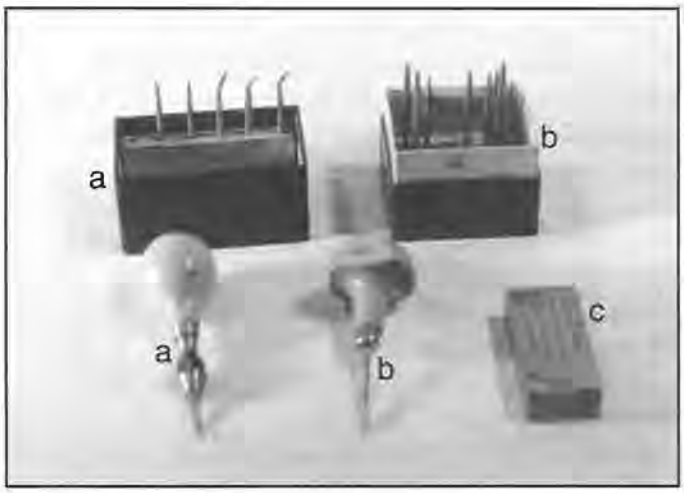

Figure 3.

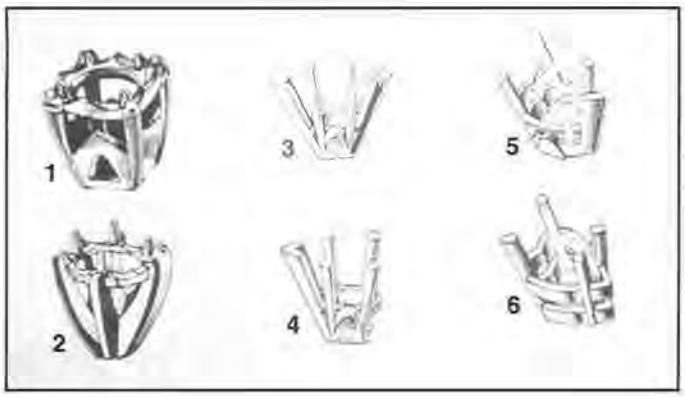

Figure 4.



REPLACEMENT ELECTRIC CLOCK MOTOR FOR A300-100 SETH THOMAS SERIES!

This motor is designed to replace the very popular A300-100 Seth Thomas series electric motors. Please note: They don't look like the originals but they are supplied with the proper gears and a mounting plate to fit them in the proper positions in the clock.

811000 .....$15.50 ea.

TELECHRON ROTORS

The following is a list of available Telechron rotors that fit some Revere, Herschede, and General Electric chiming clocks.



811002 **811003** **811008**

B TYPE ROTORS

M3506, 1RPM replaces M16, M31, M38, M60, M165, M168, M583, M591, M1162, M1726, M2260, M2377, M2510, M2843, M3069, and M3536.

811002 .....$22.50 ea.

E1028, 1RPM with gear replaces M1, M2397, M3609.

811003 .....$41.50 ea.

B TYPE FIELD AND COIL

48B field and coil.

811008 .....$24.95 ea.



811040 **811009**

H TYPE ROTORS

M3632 - 3.6 RPM replaces M714, M1024, M1145, M1313, M1519, M1630, M2020, M2146, M2275, M2309, M2317, M2319, M2394, M2475, M2676, M2682, M3420, and M3497.

811040 .....$21.50 ea.

H TYPE FIELD AND COIL

46 field and coil replaces 65, 61-5, and 70.

811009 .....$7.25 ea.

S. LaRose, Inc.

Worldwide Distributors to Horologists

3223 YANCEYVILLE ST., P.O.BOX 21208
GREENSBORO, N.C.27420,USA
PHONE:(910) 621-1936
FAX:1-800-537-4513
E-MAIL: SLAROSE@worldnet.att.net
HOME PAGE: http://www.slarose.com

MUSIC BOX CLOCKS

TWELVE-TUNE MUSIC BOX WITH SIX BELLS, PART 17

By Leo A. Jaroslaw
©1996 (All rights reserved by the author)

Introduction

In Part 16 we completed reassembling the cylinder assembly. Let us now start discussing the tune change mechanism.

NOTE: (See Figure 17.1.)

This mechanism consists of the tune change lever (74) with finger (change actuator) (106) mounted on it, change snail (103/104), register bar (105), and the spring (76) which shifts the cylinder (1) on its arbor.

The tune change lever is pivoted to the bedplate (5) on one end. The other end extends past the bedplate, through the wooden partition, and is moved by its control (11). (See Figure 17.2.) It has two positions in operation: change and repeat.

There are two grooves machined in the bedplate. A small detent is on the underside of the change lever. This detent drops into either groove to hold the lever in the selected position. The outboard groove positions the lever so that the finger (106) clears and therefore does not shift the change cam (see Figure 17.1, View B). The inboard groove positions the finger to engage with a tooth of the change starwheel (103), just as the governor stop arm pin (96) drops into its notch (View A). As the cylinder restarts, the cam tooth in contact with the stationary tune change finger rotates the change starwheel the distance of one step of the cam. The register bar (105) on the cylinder, which is on a step of the cam, slides off dropping to the next step. This action, powered by the return spring (76), shifts the cylinder so that the pins for the next tune line up with the comb teeth. This action takes place within the space on the cylinder between the end of one tune and the beginning of the next.

The change snail (103/104) consists of two sections as a solid unit, usually of brass. One section is a starwheel (103), the other a cylindrical stepped cam (104). The number of teeth on the starwheel and the steps on the cylindrical cam coincide with the number of tunes the music box is designed to play. Since our movement plays twelve tunes, that is the number of cam teeth on the starwheel, and the steps on the cylinder cam. Between each step there is a ramp/riser. This allows the register bar, along with the pin cylinder to go up the steps, from one to twelve. Between twelve and one is a vertical drop similar to the drop on a clock hour snail. The greatest load on the mainspring is at this point. Not only is the movement starting from a standstill without a run, but against the pressure of the cylinder return spring being compressed as the register bar climbs from one step to the next. The exception to this is when the

Between twelve and one is a vertical drop similar to the drop on a clock hour snail. The greatest load on the mainspring is at this point. Not only is the movement starting from a standstill without a run, but against the pressure of the cylinder return spring being compressed as the register bar climbs from one step to the next.

music box control is set on "Play." In this position the governor stop arm pin is prevented from dropping into the stop notch.

26. INSTALLATION AND ADJUSTMENT OF THE TUNE CHANGE MECHANISM.

26.1. After placing a wipe of clock oil on the shoulder of the shoulder screw, install tune change lever.

26.2. Place tune change lever detent into the outboard groove.

NOTE: This is the position the tune change lever would be in with the music box in the "Repeat" position. (See Figure 17.2.) View A shows the control panel. View B shows the panel removed and on its side to show the extensions of the controls which engage with the levers on the movement.

26.2.1. Check that the tune change finger clears the cam teeth of the change snail.

26.3. Move change lever to the inner groove.

26.3.1. Check that the finger rests under a cam/starwheel tooth.

26.3.2. Run movement while observing the relationship between the finger and the cam teeth.

NOTE: If the depthing of the finger under the cam tooth is correct, only one tooth step would be advanced with each revolution of the cylinder. The

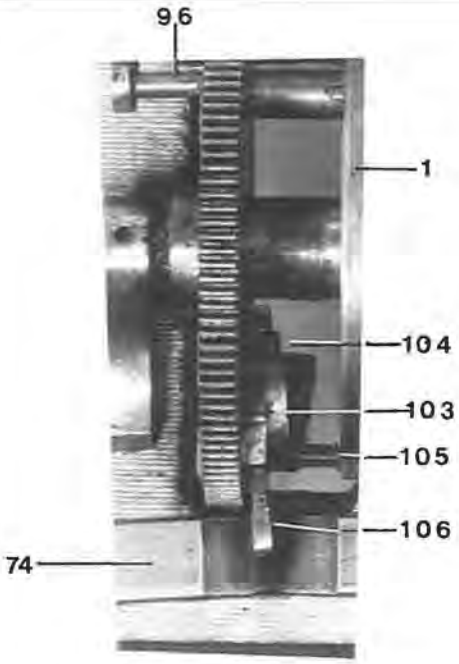

View A.
Tune change lever in change.

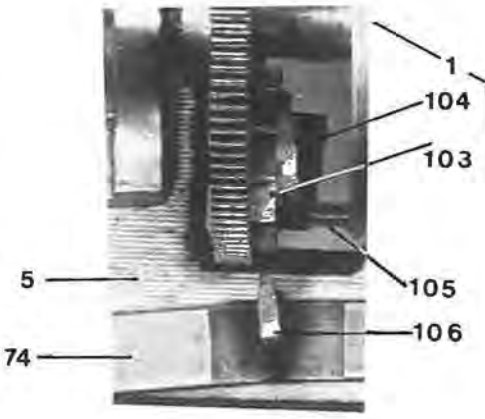

View B.
Tune change lever in repeat register bar on fourth tune step.

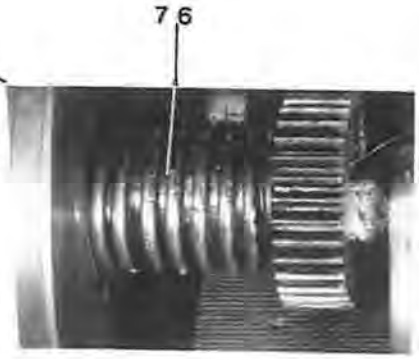

View C.
Cylinder return spring.

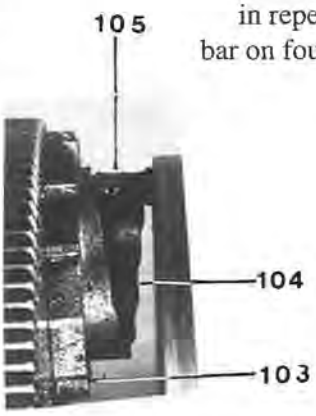

View D.
Profile of change snail with register bar on twelfth tune step.

1	Cylinder Assembly
5	Bedplate
74	Tune Change Lever
76	Return Spring
96	Controller Pin
103	Change Starwheel
104	Change Snail Step Cam
105	Register Bar
106	Change Actuator (Finger)

Figure 17.1. Tune Change Components.

finger will clear the tooth below the one it engages.

This check should be tried through all twelve positions, in our case, or whatever the number of tunes in the movement you may be working on. In case one or more teeth are too long, it may cause the snail to turn two teeth/steps.

Our movement was correct; therefore, I will not describe corrective measures. They will be covered in some of the books I will include later in the bibliography.

This ends Part 17. Originally, I intended to include the comb in this part. However, it worked out too lengthy to combine both components together. We will start on the comb in Part 18.

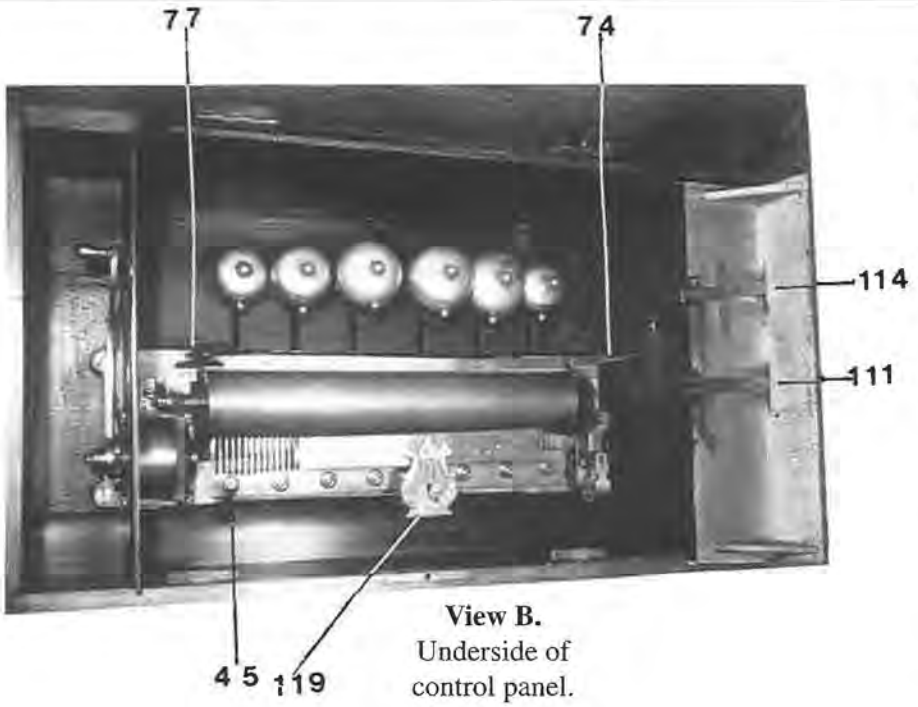

View B.
Underside of control panel.

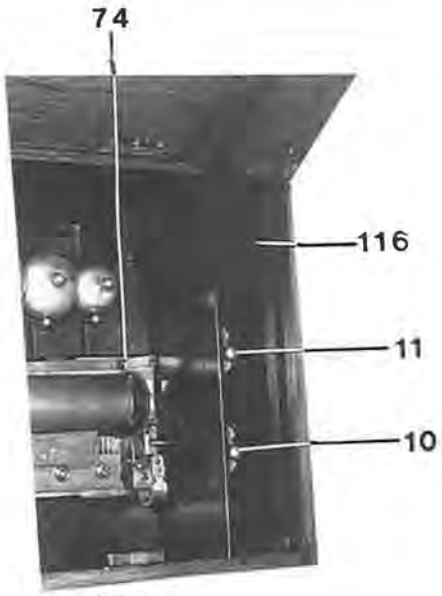

View A.
Control panel.

10 Stop/Start Control
11 Tune Change Control
45 Bell On/Off Control Lever
74 Tune Change Lever
77 Tune Indicator
111 Start/Stop Lever
114 Tune Change Control Lever
116 Control Panel
119 Zither Control

Figure 17.2. Music box controls.

HERMLE - KIENINGER - URGOS
MOVEMENTS FROM
Butterworth Clocks, Inc.

- largest distributor of Hermle movements
- distributor of Kieninger movements and parts
- exclusive distributor of Urgos movements
- over 100 models in stock--largest selection in the U.S.

TOLL-FREE (800) 258-5418
1715 Pearlview Ct. • Muscatine, IA 52761

Factory-fresh • Most models bronze brushed
Same day shipping, 2-year warranty
Call for free price list

Restore Profits!
Historic Timekeepers, Inc.'s
Ultrasonic Cleaning Concentrate
Evaluated and rated EXCELLENT by Roy Hovey

- Biodegradable!
- Odorless!
- 1 gallon makes 8 gallons
- Non-hazardous shipping!
- Lacquer friendly!

$26 per gallon plus $4 shipping
$7 per pint plus $3 shipping

Send check to:
Historic Timekeepers, Inc. • P.O. Box 69 • Fork, MD 21051
• Available through Timesavers • Dealer inquiries invited

ROCK QUARRY

By Fred S. Burckhardt

Once again, it is that time of year for long work hours, some unkind customers, coworkers that are not as friendly as they usually are, a smiling boss that is running through the cash with his bare feet, and a host of customers waiting to pounce upon the sales counters when the doors open.

It is during this period that we must not lose our Yuletide spirit. We must remember to treat our customers like they are real people. Don't do or say anything that would cause them to become upset or irate. For example, if a customer brings in a watch that has been laying in a drawer for sixteen years and they want it fixed in a hurry for their nephew Kraal's Christmas present, don't be mean and put on a short minute hand and a long hour hand. This would not be showing the best of your Christmas spirit.

If a little old lady comes driving up on a motorcycle and takes an hour of your time and ends up not buying anything, be kind and wish her Happy Holidays. Of course, if she says, "Your store sucks," it would be proper to give her a swat on the back of her head.

People who work together in a friendly atmosphere during the year should not let anything change during this season. I've seen good friends become absolutely hostile toward each other, which, believe it or not, makes for a very tense working environment. You shouldn't let hard feelings pervade your affections for each other. One time I saw it get so bad that one employee smashed another employee's kumquat sandwich. You will agree, no doubt, that this is going a little too far. Hitting and kicking is okay, but fooling around with another person's lunch is unforgivable.

Even though you may become tired and irritable, this is no reason to be rude to those around you. There is no excuse to lose your "couthfulness" and become uncouth. A good example of this is a story of a clockmaker I once knew. During the year he was one heck of a nice guy but during the holiday season he became a monster. One time, he worked overtime in order to get an Atmos clock ready for a Christmas gift. On Christmas Eve, the customer came in to pick it up and made some comment about how long it took to repair the clock. Now, any other time, this comment would have been overlooked but when I saw smoke coming out of the clockmaker's ears, I knew it was a good indication that this time the comment was like pouring alcohol on an open wound. He picked up the clock, held it head high and let it drop to the wooden floor. He then made a sign with his finger. I wasn't sure if he was talking about the customer's age or IQ. Anyway, I think the customer got the message as he quietly turned and walked out the door. He didn't even wait to get his free peppermint candy cane.

It is surprising, how everything changes after the last customer leaves and everybody relaxes since the pressure is relieved. A few belts from the old bourbon bottle also helps. Now this isn't to say that you should take a blast, especially if you are driving. Most watchmakers and clockmakers I know have enough sense to quit after twelve or thirteen. One shop where I worked in Philadelphia had a party every Christmas Eve. One year, out of twenty-some employees, I think three made it home for Christmas. I'm glad I left early and went to the revival where I led the hymn singing.

All I can say is, Happy Holidays to all and if you can't say something nice about someone, then tell it like it is!

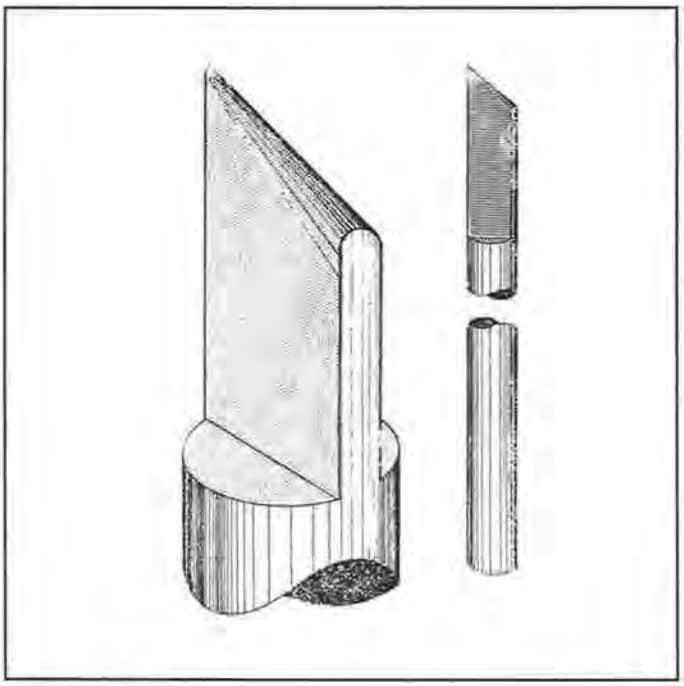

Figure 9. Two views of a popular type of jewel bezel burnisher.

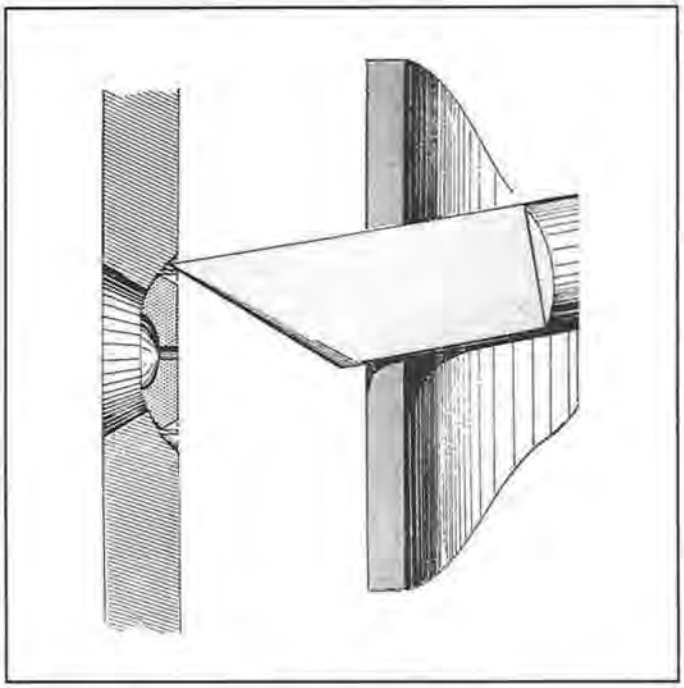

Figure 10. How this type of burnisher is applied to the bezel groove.

REPAIRING MECHANICAL WATCHES & CLOCKS

A COMPLETE SERIES OF BENCH PRACTICES

JEWELING, PART 2

By Henry B. Fried, CMW, CMC, FAWI, FBHI, ★FNAWCC
© 1996 (All rights reserved by the author)

Burnishing Jewel in Setting

Watchmakers with jeweling experience have a variety of large steel knitting needles which they have converted into jewel setting burnishers. Some watchmakers use phonograph needles, slightly blunting the tips to prevent cutting into any part of the setting.

One of the most popular shapes of jewel bezel burnishers is shown in Figure 9. Its angle and shape is ideally suited for spinning over the bezel with the least effort and without danger of tearing it. This burnisher is made from high-carbon steel (drill rod) about 2.50 mm thick and about 5" long. It is shaped, smoothed with emery, hardened, and polished with crocus cloth or diamantine on a boxwood block.

To secure the jewel in its setting (as shown in Figure 10), apply the burnisher to the groove outside the bezel on the far side of the setting while the lathe is in motion, turning in a clockwise direction (facing the chuck). A drop of clean oil applied to the tip of the burnisher will prevent "grabbing" of the metal. The T-rest, as shown in Figure 10, is placed at right angles to the lathe's axis and raised to permit the burnisher to contact the work readily and give it support. With the lathe in motion, ease the lubricated burnisher gently into position, apply a little pressure, and move it slowly in an arc, as shown by the arrow in Figure 11. The burnisher thus presses the metal over the bevel of the jewel, centering and holding it securely in place.

Making a Jewel Setting

Sometimes it is necessary to set a jewel into a brass (bushing) setting, which in turn is fitted into a recess or counterbore in the plate or bridge such as is found in American and some Swiss balance bridges. This

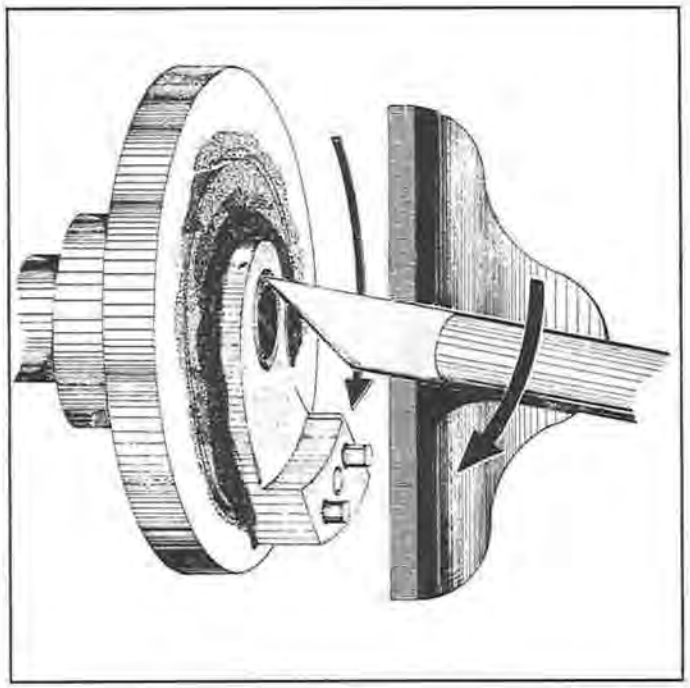

Figure 11. Showing the shellacked, centered bridge having its jewel setting burnished over, while the lathe turns in the direction shown by the arrow; move burnisher slowly as indicated by arrow.

arrangement has certain advantages over the bezel-set jewel placed directly into a plate or bridge. Many jewels can be replaced on one wheel pivot position without seriously altering the center distance between wheels. If a jewel in a bushing has an off-center hole, the jewel hole may be centered on a shellacked chuck, and the bushing trimmed concentric with the jewel hole.

To employ the foregoing arrangement, suppose that the sample is lost and measurements must be taken from its position in the movement (in this case from the balance bridge).

Select a balance jewel that fits the balance pivot accurately. Setting the balance jewel into a brass rod which, when shaped in the lathe, becomes the setting to fit the balance bridge. Use a length of rod brass about 4 mm thick, holding it in the lathe by a close fitting chuck. Apply a sharp graver carefully and gently to the face end of the metal, and cut a slight countersink at the center of the metal to guide a drill point, as shown in Figure 12.

Using a drill about three-fourths the diameter of the jewel, bore a hole about 6 mm deep (see Figure 13).

Make a seating for the balance jewel. The surface of the balance jewel (which will contact the seating) probably may be curved; if it is curved, make a seat to conform to this shape. The depth of this seat should be .02 mm deeper than the thickness of the jewel, and the width of the seat should be the width of the jewel. A boring tool shown in Figure 14, may be made of drill rod, hardened, and tempered to a light straw color. (A specially-shaped graver also may be used for boring, but in this case be

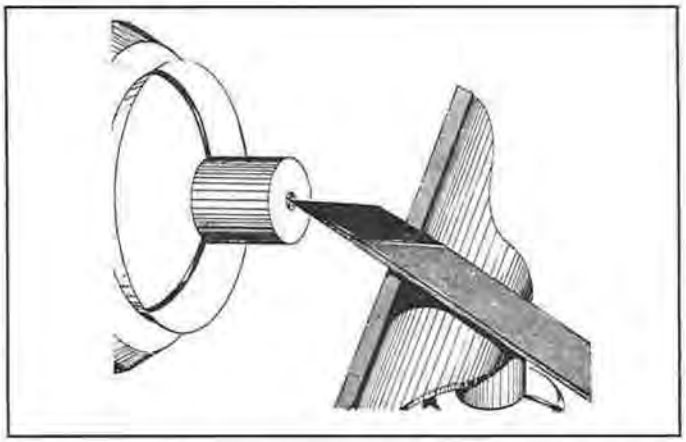

Figure 12. The first operation in making a jewel setting is to provide a center guide.

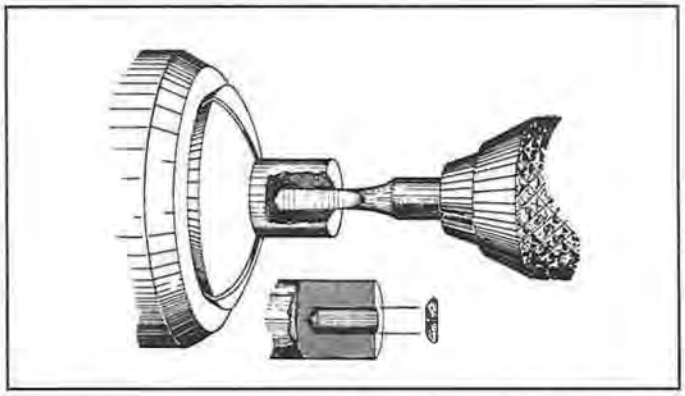

Figure 13. A hole about 3/4 the diameter of the jewel is drilled to a depth of approximately 6 mm.

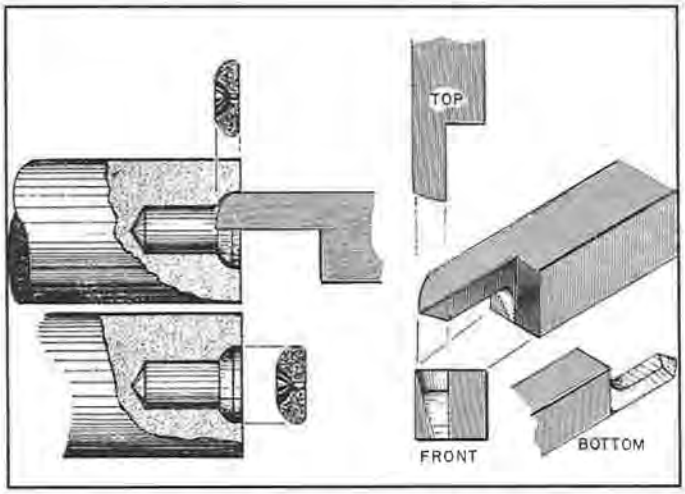

Figure 14. Details of a boring tool which can cut the seating for the jewel.



Figure 15. For a balance jewel setting, top of setting should have clearance indicated between top of jewel and of setting.

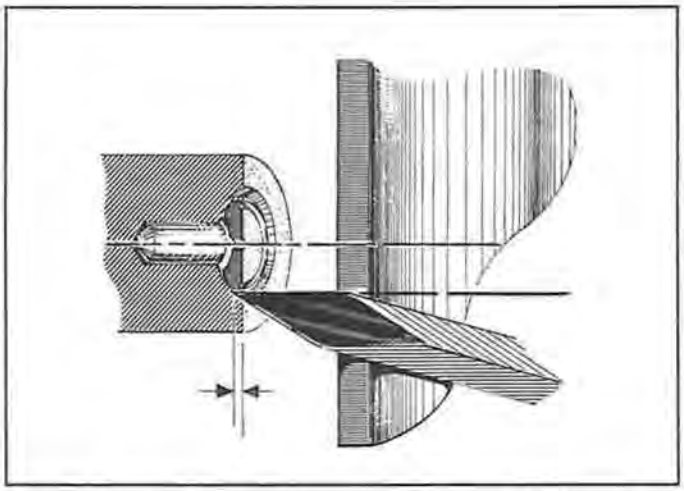

Figure 16. Applying a sharp graver to cut the bezel; notice that the cutting edge is held parallel to lathe axis.

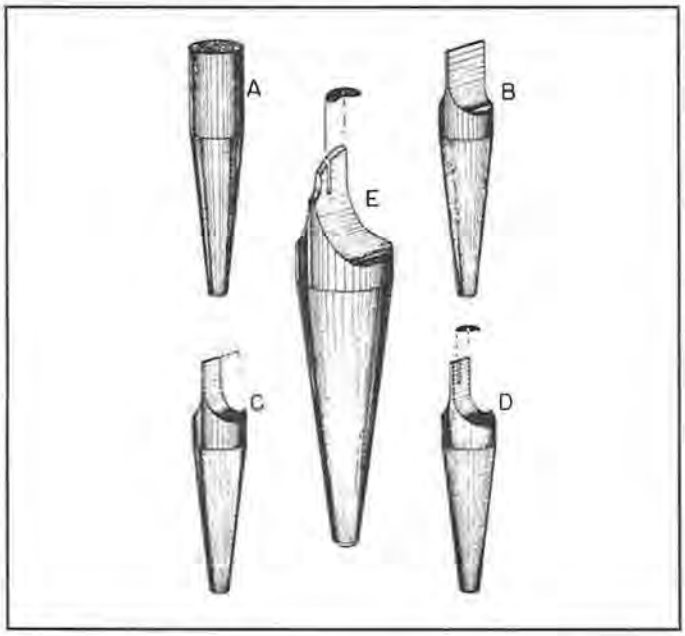

Figure 17. Tailstock-taper jewel setting cutter: taper (A), grinding to chisel shape (B), half of taper ground away (C), thin slot cut to depth of jewel's radius (D), cutter face curved (desired slope of jewel set), sharpened (E).

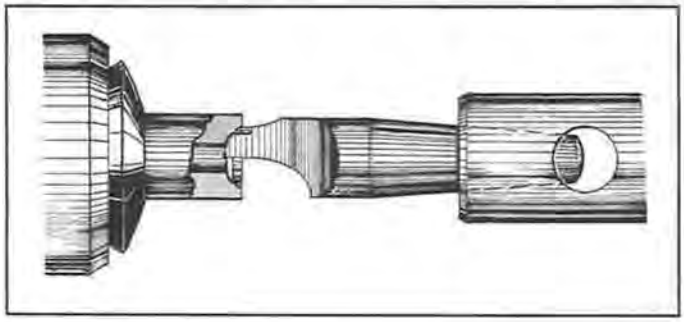

Figure 18. Tailstock-taper seating cutter makes a seating and bezel in one operation.

exceedingly careful in cutting the seat so that you do not cut the edge of the countersink.)

Many watchmakers test the depth of the counterbore with the jewel. In the case of a plate jewel, many test it by placing the jewel on the flat end of a pegwood stick held by a spot of beeswax. Try the plate jewel into the seating, and if it is below the edge of the counterbore or countersink, face the surface of the bushing until the jewel is flush. If the plate jewel does not sit deep enough, deepen the seating. When the jewel is flush, cut the thin-rimmed bezel. (If the setting is to be for a balance jewel, the top of the jewel must be slightly below the top of its bushing for a clearance of about .02 mm between it and the surface of the cap jewel for oil, as shown in Figure 15.)

Watchmakers experienced in setting jewels often prefer to cut the thin-rimmed bezel while the jewel is in its seating; on the other hand without anything inside the hollow counterbore, the thin-walled rim may be bent over as the graver cuts it, reducing the entrance diameter of the counterbore making it difficult for the jewel to enter its setting. Oil the jewel to hold it in place while the rim is being cut (or use a pinhead of beeswax), as shown in Figure 16. While being cut, the rim will bend slightly away from the graver and slightly over the jewel, holding it securely for the final burnishing-over operation.

Finally, to cut the thin wall rim, apply the graver to the face of the metal close to the edge of the counterbore in which the jewel is seated. (It is advisable to cut this rim thin so that it can be spun over without pressing too hard on the rim and without any loss of "feel" or danger of cracking the jewel. The graver recommended for this purpose is one with an acute angle, applied to the setting as shown in Figure 16.

The T-rest is still in the same position, facing the front of the stock. The groove should be as deep as the bevel of the jewel. This is shown by the dimensional arrows in Figure 16.

In making jewel settings, watchmakers occasionally make a set of jewel-setting cutters for cutting the counterbore and the bezel. If a set is made, make it so the cutters fit into the tailstock spindle. If some round stock steel is on hand, cut it carefully to the required angle to fit the taper in the spindle, using a slide-rest set to the correct angle when cutting. If steel with unfinished ends is bought, shape them to the desired form and dimensions.

Steps in making a cutter are shown in Figure 17. The unfinished end of the cutter stock is filed or ground to a screwdriver shape (B). In this screwdriver shape the cutter would cut a counterbore the diameter of the tool; however, if the tool had half of its side removed, it still would cut a countersink of the same diameter and, in fact, would make a cleaner cut (C). Use a fine jeweler's saw to cut a slot into the edge of the cutter (D). Shape the end of the cutter (E).

To cut with the bright finish desired in good work,

polish the cutting surfaces of the tool after hardening and tempering. The cutter will leave a thin-walled rim between the outside groove and the countersink, which becomes the bezel (see Figure 18). A set of ten cutters in various widths usually is sufficient to cover most jewel sizes.

Although bezel burnishers come in many styles, the one shown in Figure 9 will do for most work. Spin or burnish the thin-walled rim over the beveled edge of the jewel, as explained in earlier paragraphs (see Figures 10 and 11). Do not press too hard, and use a little lubricant and keep the burnisher highly polished and free from scratches.

When the jewel is secure in its setting, trim the outside diameter of the bushing to fit snugly into the stepped opening of the balance bridge (see Figure 19). The wire now holding the jewel bushing may be turned to this new diameter and tested so that it fits snugly into the larger upper part of the stepped opening. Separate the brass bushing with its jewel from the remainder of the rod at least the thickness of the balance bridge at the end in which the jewels are housed.

After the thin bushing with its jewel is separated from the rod, cut the lower smaller shoulder holding the bushing and jewel in the lathe.

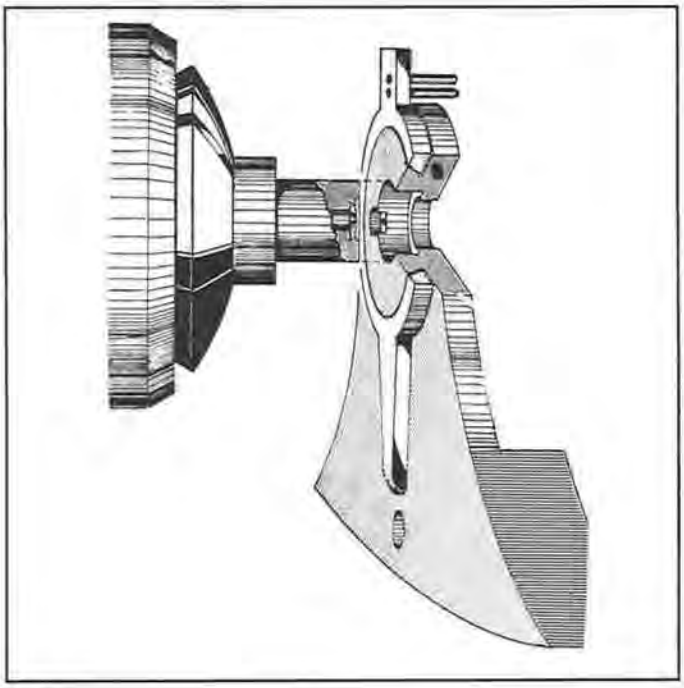

Figure 19. Jeweled rod is cut to fit into upper recess of balance bridge.

Livesay's Inc.

Wholesale Jeweler & Watchmaker Supplies
Tampa, Florida 33602-1200

Circuit™ Works

Repair circuits & coils quickly and easily. Filled with a conductive material, this pen allows you to draw fine lines as easily as writing your name. Instant silver conductive traces can be made on rigid or flexible surfaces. Dries quickly at room temperature. Self cleaning tip allows for easy application. ***Doesn't dry up the way other conductive material does!***



#CE-2200 **$12.95**

Watch Crystal Scratch Repair Kit

Now you can quickly & easily repair scratches in glass or plastic watch crystals. Repairs can even be made with crystal still in the case. Kit contains everything you need to get started, including instruction sheet. All that is required is a flex shaft or motor tool that holds 1/8" shanks.



Kit includes:

- Polishing compound for plastic crystals
- Polishing compound for glass crystals
- Felt pads for plastic & glass crystals
- 1/8" mandrel for discs with velcro mounting
- 8 abrasive discs
- Handy storage container

#PS-900 **$25.00**

HOLIDAY HOURS
Yes, We Are Open:
Saturday, December 14th 9:00am - 1:00pm
Saturday, December 21st 9:00am - 1:00pm

Your Headquarters For Batteries, Watch Material, Tools, Findings, Bands, Jewelry Boxes, Casting Supplies, Watch Movements, and Much, Much More. Catalogs Available.

Phone Orders
(800) 476-2715
Toll Free 24 Hour FAX Orders
(800) 476-8016
1296
Tampa (813)229-2715 Local Fax (813)221-8016

AFFILIATE CHAPTER COLUMN

By Jack Kurdzionak

Traditions

We Americans are very mindful of traditions at this time of the year and many come to mind immediately. Gift giving, Santa Claus, Christmas Trees, and Menorahs are just a few worth mentioning.

A check of the dictionary tells us that the word *tradition* has several meanings. One definition includes the handing down orally of stories, beliefs, customs, proverbs, etc. from generation to generation. Another meaning is that of a long established practice or custom that has the effect of an unwritten law. Our holiday season is full of traditions originating from many different countries and cultures. America is a place where many old-world traditions are carried on. This gives us a connection to our past and allows us to pass on our culture to future generations. The continuity of our traditions is the glue that will cement our culture in the future. If any of us had the ability to visit American 200 years hence, the Holiday season would be still recognizable, albeit somewhat changed as tradition allows gradual changes.

Horology is a tradition-filled profession. Many are to be valued and carried on. People from outside of our profession are often astounded at the ways in which our craft is practiced. One minor example I frequently cite is our practice of procuring parts in fractions of a dozen. Material is often sold in 1/12, 1/6, 1/4, 1/3, and 1/2 dozen lots. Yet I have seen material packages coming from Japan, where parts are sold decimally, being labeled as 5/12 dozen. Our practice of buying by the dozen is very strong and is still useful for counting parts.

Clock and watch repair textbooks from England are steeped in repair methods which have been used there for over 150 years. Clockmakers brushing clock plates with chalk and watchmakers stringing parts on wire for dipping in cleaning solutions are methods still found in some books from England. American watch material dealers still sell boxwood sawdust for drying parts which have been strung on a wire for cleaning. Pegwood and pithwood have not yet gone the way of the dinosaurs. About twenty years ago, a young salesman for a company distributing ultrasonic cleaning equipment once remarked to me that many clockmakers he met were so old-fashioned as to use warm sawdust for drying clock parts. I then showed him my box of sawdust and explained that in some circumstances it was the appropriate method for drying parts. This was his first job after college and he just wasn't familiar with our craft and some of its methods.

There is one tradition that I wish would disappear, but I know it will be here 200 years into the future exactly as it appears today. I picture a customer walking into a watch repair shop on December 13, 2196 and asking to have his grandfather's antique timepiece repaired in time to give as a gift for Christmas.

Traditions which work well serve a purpose and will be continued on into the future. We sometimes confuse tradition with habit. Traditions serve a useful purpose for society and professions, but habits, both good and bad, can remain with us so long we just think that they have always been around. Traditions have been with us for generations while habits are just unthinking, automatic ways of doing things that can be confused with a tradition. Good habits make a task easier because they help us perform that task almost automatically and flawlessly. Bad habits, once acquired, can hinder our performance when performing a task. All habits are difficult to modify or stop.

The business meetings of a chapter are a good place to examine traditions and habits. There are good procedures and traditions to carry on in a business meeting and there are some bad practices that can be eliminated. Business meetings following a guidebook such as Robert's Rules is a good practice. This allows fair play at the meeting for all parties in attendance. Our own chapter has a moment of silence at the beginning of each meeting. This allows the meeting to come to order without the use of a gavel. A good practice is to have an active board of directors to evaluate all new business and bring their collective

wisdom to the membership for a discussion and vote. A bad habit is for the presiding officer to allow business to be brought to the floor and discussed ad infinitum without referring it to the directors for their recommendation. This can make a meeting very unproductive and boring.

A good meeting will flow smoothly along with all points of view being heard without a lot of redundancy. Good procedure will lead to efficient meetings and better programs after the business meeting. No guest speaker wants to be waiting while a group debates minor issues that should have been resolved in private directors' meetings, nor does that speaker desire to listen to the bickering of members while waiting for his turn to give his presentation. A chapter which has the habit of allowing bickering or private side conversations during a business meeting will be well served to eliminate that practice.

Many of our experienced chapter members have grown up with a tradition of attending formal meetings for many purposes. High school and college clubs, and fraternities, lodges, and volunteer groups come to mind immediately. Many of our younger members do not come from that same background and we must understand that the society around us has changed so that many of the previously mentioned organizations no longer exist as they did in the past. That being the case, many of our newer members must be oriented to business meeting procedures and traditions. Please show them, by your example, the best of our traditions and leave the bad habits in the past.

As is traditional for this season, I wish all of our membership a very happy Holiday season.

MEMORIAL CONTRIBUTIONS

There can be no more fitting way to perpetuate the memory of a loved one, than by making a memorial contribution in that persons name to the AWI ELM Charitable Trust's Scholarship Fund.

Such scholarships provide tuition assistance for those who need assistance. Your contribution will help to insure the continued vitality of our craft

All memorial fund contributions are tax deductible.



TIME FOR ACCURACY

WITSCHI's waterproof tester — the ALC 2000

Tested in Europe and found to be the most accurate!

- user-friendly — *fully automatic measurement programs*
- flexible – tests **vacuum** and **pressure** — ***vacuum*** *(up to -0.8 bar) and* ***pressure*** *(up to 10 bar), separately or combined*
- programmable — *10 customer specific test programs*
- multi-lingual — *9 language choices: Eng., Fr., Ger., It., Sp., and the 4 Scandinavian languages*
- practical — *automatic locking and release of the pressure chamber*
- fast — *automatic or manual from 10 to 300 sec.*
- future-orientated — *assured by a 16-bit processor*
- able to **print** results — **WITSCHI** *printer (Citizen) or printer with serial interface*

WITSCHI
A SWISS BASED FIRM

WITSCHI ELECTRONICS USA Ltd.
34 E. Henry St., P.O. Box 2, Palmyra, NJ 08065-0002
Tel.: 1-800-882-7977 Fax: 1-609-829-2266

EDUCATION UPDATE

By James E. Lubic

I would like to start by wishing everyone a Happy Holiday Season, and a healthy and prosperous New Year. This is a great time to be a member of AWI. Our profession has a wonderful future and your Institute has a wonderful future too. All you have to do is take advantage of all we have to offer, specifically in continuing your knowledge. Please take a few moments of your time and study the upcoming schedule of courses on the back cover. I know it is difficult to get away from the everyday grind for a week at a time, and there is that little problem of money too. But sometimes I think you have to look at continuing education and say, "Can I afford not to learn more about my craft/profession?" AWI has some of the best professionals in horology willing to share their knowledge in order for you to become even more educated and successful in your trade. Not only do you have the opportunity to pick your instructor's brain, but there are eight to twelve other craftsmen in your class with experience and knowledge that you can learn from. Make a New Year's resolution to expand your knowledge, learn a new skill, or perfect an old one. You will be glad you did.

You can also expand your knowledge by becoming certified. Certification is the best way to be noticed by your peers as well as gaining your customer's respect. Don't stop there, honk your own horn. Speak at local functions, participate in community events, and contact local newspapers to do a feature on your business and your knowledge of the business. Some of you may be laughing by now because you don't do any of this and you have more work than you can handle. I know this is true for a lot of people in our trade. Try something new. Raise your prices and take a vacation this year. I hear two stories almost daily. One is "I can't get any work," the other is "I have way more work than I can handle." Do something different and I'll bet it works.

The Academy of Watchmaking students have been working very hard since the first day of class on July 15. They have come a long way and are looking forward to Christmas break. I don't think it has anything to do with the hairspring work they recently started; maybe it does. They have all worked hard and have done a great job. They deserve a break.

The Academy students will be graduating in June of this year. Several are looking for work. If you are interested in hiring a graduate of the Academy, please contact me at AWI Central as soon as possible.

I would like to thank John Sokol of Protime Service for his efforts in allowing Mark Heist to conduct a recent Mechanical Chronographs course in their facilities. They really rolled out the red carpet for participating AWI members. Thanks Protime Service!



The Introduction to the Watch Movement Class, (left to right): Chris Gurule, David Feldkamp, Chip Lim, Phil Stoller, Ivan Angulo, Vince Dillon, Will Overturf, and Bill Pleiman.



Vince Dillon fits a crystal during the Band Repairs and Crystal Replacement Course with David Christianson.



Phil Stoller and Ivan Angulo adjust the timing of three watches during the Introduction to the Watch Movement Course.



Nestor Hincapie inspects a case during the Band Repairs and Crystal Replacement Course with David Christianson.



Participants in the Mechanical Chronographs Bench Course held at Protime Service in New Jersey, (left to right): Gary Cruickshanks, Michael Wilkin, David Shields, Chris Christopherson (kneeling), Keith Lovett, John Sokol of Protime Service (kneeling), Nick Franciosa, Fima Novik, Ed Castro, and Mark Heist, AWI instructor.



John Sokol (Protime Service) and Mark Heist (instructor) take a break during the recent Mechanical Chronographs Bench Course hosted by Protime Service. Keith Lovett and Nick Franciosa are in the background.



Instructors Ron DeCorte and Tim Schlotter address the Machine Shop Practices class.

Happy Holidays!

From all of us at
TWIN CITY SUPPLY

FREE!

with purchase of Ultrasonic Cleaning Machine!

Ring Rack - CL624T

Heavy duty, poly-coated ring rack is ideally suited for L&R two quart or larger ultrasonics (Q90) Retail $4.95

AND

FREE Sample of Jet Lube (Jettacin)

Heavy duty non-ammoniated jewelry cleaner. High concentration. Mix 20 parts water to 1 part Jettacin.
(CL6900 - 19.95 gal.)



L&R

Quantrex® Ultrasonic Cleaning Machine

L&R's exclusive double warranty covers defect for 2-1/2 years, the housing for 5 years, and the tank-to-transducer bonding for 10 years.

- 2 quart capacity.
- 30 minute timer with hold feature.
- Vinyl-clad metal and stainless-steel construction.
- Stainless-steel cover. • "On-off" heat switch.
- Compact: 6-7/8"L x 6-3/8"W x 8-7/8"H
- Tank: 5-7/8"L x 5-3/8"W x 4"D • 117 VAC, 60/60 Hz
- Input: 0.5 Amps, 103 Watts
- Peak Output: 160 Watts, 43 KHz

CLQ90TH $266.00

TC TWINCO **TWIN CITY SUPPLY**
6150 Wayzata Blvd., Minneapolis, MN 55416-1239
(612) 545-2725
USA: 800-328-6009 FAX: 800-328-6001

A Practical Course In Clock Repair

Unit 2

Making Screws

By John P. Kenyon, CMC

When restoring antique clocks, screws almost always need to be made or refinished by the clockmaker. Assortments of steel screws are available from suppliers, but often the correct size and/or thread is not procurable; therefore, it is essential to be able to make replacements or rework damaged screws.

To make screws, it is necessary to have a clock screw plate or an assortment of dies to work with. In a clock shop, screw plates are convenient to use. They are becoming scarce in suppliers catalogs, but are still obtainable from used tool dealers at marts. Generally, clock screw plates cover a range of screw sizes from 1-5 mm in diameter. Tap and die sets, in sizes most commonly used by clockmakers, can be found in some catalogs, but they are very expensive.

If a screw has been lost, a screw plate or die can be used to determine the size from another screw. (Usually there are two or more screws of the same diameter and pitch of thread in a clock movement.) Otherwise, a tap is used in the screw hole to determine the diameter and pitch of thread. A set of taps, conforming to the sizes in the screw plate or set of dies, is usually included in the package.

Turning the Tap End

To make a screw, a piece of annealed high-carbon steel staff wire or drill rod, slightly larger in diameter than the required screw head, is tempered to pale blue. The tap end is turned down and a square shoulder is cut at the head (see Figure 1). The tap end should be made slightly longer than required, to allow for some impaired threads on the end caused by starting the screw plate. A slight taper is turned at the beginning of the tap to facilitate entrance into the screw plate. When threading is finished, the taper and excess length are cut off. The diameter of the blank tap is critical. If it is too large, the screw plate will either strip the threads as fast as they are made, or the tap end will break off in the plate. If too small, a full-size thread will not be cut.

Cutting the Threads

The stock is not removed from the lathe after turning down the tap end. Threads are cut while it is still in the chuck. The screw plate is held with the right hand, while the head stock is turned with the left hand, to rotate the tap end into the screw plate for a quarter of a turn (see Figure 2). It is then turned in reverse for at least a half-turn, and so on, until the tap end is completely threaded (see Figure 3). This technique allows the metal chips to fall away through clearance holes on the sides of the die hole in the screw plate, preventing a build-up of metal that could obstruct the cut and damage the threads. A little lubrication with clock oil will promote an easier cut.

The tap end should never be forced into the screw plate. A "squeak" while threading indicates that the die is not cutting, and continued forcing will break the tap.

Grinding and polishing a flat screw head while holding it with tweezers is rather difficult, especially on a very small screw. A preferred technique employs a screw head polishing tool, as shown in Figure 8. The screw is held in a groove between the jaws, and the two leveling screws (which form the other two legs of the tripod) are adjusted to hold the head flat to the grinding block.

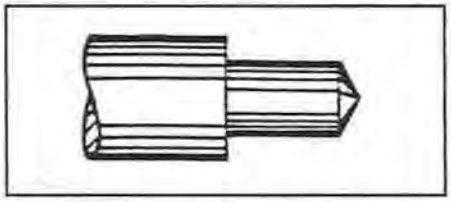

Figure 1. Turned tap end.

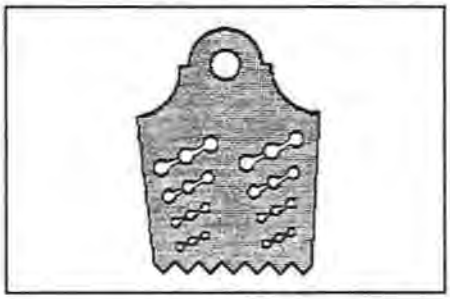

Figure 2. Swiss screw plate.

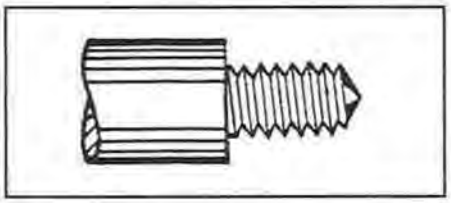

Figure 3. Threaded tap end.

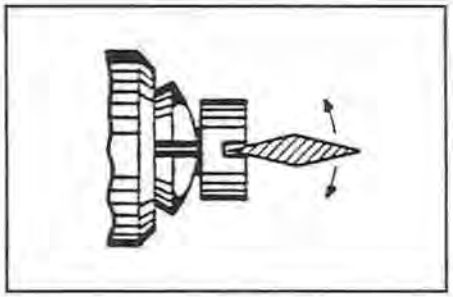

Figure 4. Filing a slot.

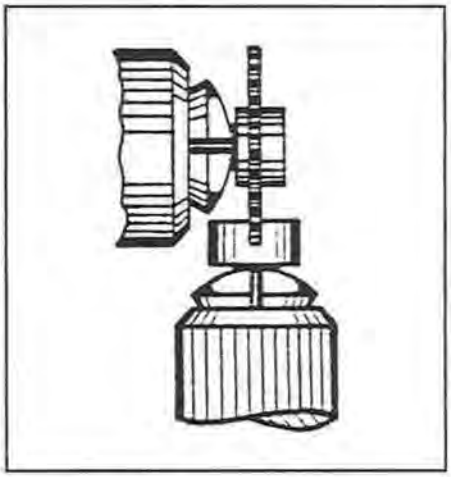

Figure 5. Cutting a slot.

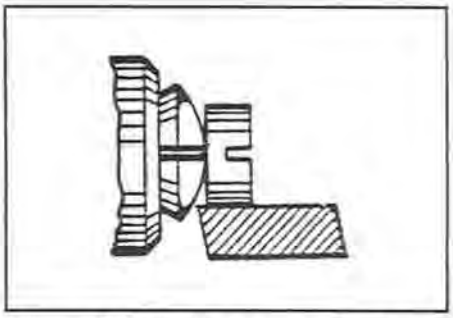

Figure 6. Grinding a screw head.

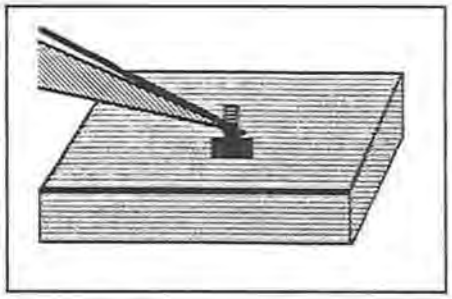

Figure 7. Grinding the flat surface of a screw head.

706 S. Hill St., #580
Los Angeles, CA 90014

SMITH SUPPLY HOUSE
LOS ANGELES

Tel: (213) 622-1687
Fax: (213) 488-0922

Watch Materials, Supplies & Tools

Watch Battery Distributor

PYRAMID STYLE GLASS CRYSTALS

SIZES: 18.0 mm thru 32.0mm,
0.5mm INCREMENT



SALE PRICE
$6.00 EA. PLAIN
$8.00 EA. GOLD TRIM
$8.00 EA. BLACK TRIM

DOME TEMPERED GLASS FLAT BOTTOM

NEW ***NEW***

SIZES: 18.0 mm thru 32.0mm,
0.5mm INCREMENT



SALE PRICE
$6.00 EA. PLAIN

MasterCard

YOUR SUPPLIER OF SPARE PARTS FOR ALL BRANDS OF MECHANICAL AND QUARTZ WATCHES, CLOCKS AND ALARMS

VISA

CALL TOLL FREE (800) 23-SMITH

JIDA

Mido · Mondaine · Omega · Tissot · Vulcain · Zenith · Quartz · Rayville · Record · Revue · Bulova · Certina · Eterna · Bifora · Cattin · Citizen · Pulsar · Hamilton · Roamer · Hattori · Seiko · Kif · Lanco · Lorna · Longines · Marvin · Ricoh · Orient

AWI

Turning the Screw Head

While the stock is still in the chuck, the desired length of the head is marked, and then turned down to size. A little material should remain for grinding and polishing. Next, a graver is used to separate the screw from the stock.

The appropriate chuck is selected and the screw is reversed in the lathe. The chuck must be closed lightly on the tap so the thread will not be damaged. Now, the head is "faced off" to the proper length.

Cutting the Slot

The thumbnail is used as a guide at the center of the screw head, and a screw head file is used for cutting the slot to the same depth on both sides of the head (see Figure 4, page 31). The slot can also be cut with a small thin circular saw installed in the lathe chuck, while holding the screw in a pin vise on the T-rest (see Figure 5, page 31). The slot should be cut deep enough to permit sufficient depth to remain after grinding and polishing.

The screw is now tried in the movement and tested for side shake and endshake.

Heat Treatment

The screw is hardened in the usual manner and tempered to dark blue on a bluing strip. This gives the threads proper strength, and will prevent the slot from being easily burred by a screwdriver. Screws to be given a high polish may be tempered to bright blue, but those having very small taps will break easily when so tempered.

Grinding and Polishing Screw Heads

After hardening and tempering the screw, it is placed in a chuck in the lathe by the tap end. The cylindrical section of the head is ground truly cylindrical with a grinding slip, using a combination of oilstone powder and clock oil made into a paste (see Figure 6, page 31). If the head needs to be rounded, an oilstone slip can be used to shape it.

After grinding, the screw head is thoroughly cleaned with soap and water and dried, so that no grinding compound remains to adulterate the polishing compound. Cleanliness is imperative if a successful job is to be expected. Dust and foreign matter must be avoided.

The polishing operation is similar to grinding, except that polishing abrasives are used to give the screw head a high-gloss finish. Fine diamantine (or equivalent) mixed with watch oil to form a paste is used for polishing. Jewelers rouge mixed with alcohol can be used as an alternative to diamantine paste. When using this mixture, the alcohol evaporates, leaving a thin layer of rouge on the surface to bring out the luster. A burnisher can also be used for the final finish.

The flat surface of the head is ground on a flat iron grinding block, while holding the screw with tweezers as shown in Figure 7 (page 31). Either lateral or circular motion is used while holding the screw head flat to the grinding block. Polishing is done on a ground glass plate, and then on a flat lead block.

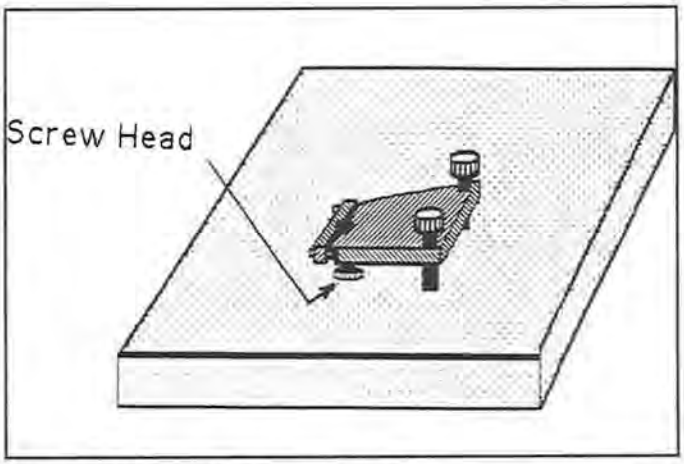

Figure 8. Screw head polishing tool.

Grinding and polishing a flat screw head while holding it with tweezers is rather difficult, especially on a very small screw. A preferred technique employs a screw head polishing tool, as shown in Figure 8. The screw is held in a groove between the jaws, and the two leveling screws (which form the other two legs of the tripod) are adjusted to hold the head flat to the grinding block. After a few strokes and without removing the screw from the tool, the screw head should be cleaned for observation. If only a portion of the head shows evidence of grinding, the screw can be further leveled and tried again until it is correct. To examine contact of the screw head flat surface, it can be viewed through a piece of plate glass, and leveled with the leveling screws (legs). The screw and tool must remain intact throughout the process (including washing).

Coloring Screw Heads

In most standard-grade clocks, movement screw heads are given a regular line finish and not colored. Those that are colored are held over a flame on a bluing strip until the desired color appears, and then dropped into water. In most high-grade clocks, movement screw heads are ground and polished before they are colored. This results in a more pleasing appearance.

FROM THE WORKSHOP

By Jack Kurdzionak

All of you are invited to submit your tips to the "From the Workshop" committee for publication in this column. All members of the committee have been requested to submit their own tips but the column is not limited to submissions from committee members. Appropriate credit will be given to the source of all tips published here unless otherwise requested. If you have any suggestions you think might be helpful to other members, please send them to the committee at AWI Central for its consideration. Remember, this in not my page, but yours.

It Pays Not to Advertise

Don't advertise the possible presence of valuable merchandise in shipments to and from your business. The postal service and private package carriers all have their share of thieves. If they did not, there would be no postal inspectors and the private carriers would not have to use extensive security measures. Most thieves are opportunists. They act only when the opportunity presents itself. When a package or fat envelope comes through marked either to or from "Jones Jewelry and Fine Watches," bells go off and lights start flashing. It's only a second until the package drops off the conveyor belt and in the process of picking it up it is slit open and the contents pilfered.

Note that many material houses use a return address that gives no indication of the type of merchandise contained in the package. One well-known maker of expensive watches uses only initials for their return address name. In my own business, I do not send a package to Jones Antique Shop from Bill Schroeder, Watchmaker. Rather, I will send it to Ms. Mary Jones from Bill Schroeder. Insurance may pay for a loss but the heirloom watch cannot be replaced. Insurance does not pay for the hours lost to file and prove a claim and will not replace a lost customer.

Thirty-five years in law enforcement and retail loss prevention give me some experience in these matters. One mail order company I know of terminated 6% of its employees each year for theft and this did not include suspected thieves, only confessed or convicted ones. Included in the 6% were vice presidents, salespeople, and clerks.

Bill Schroeder, Chicago

Traveling Insurance

Watches left in a shop for repair are probably safer than when in an owner's possession. Shops usually have alarm systems, safes, and security procedures not found in homes. Unlike the owner of a watch, the watchmaker usually does not wear on his person or display to others the watches entrusted to his care. While the watches are in the care of the watchmaker, they are usually secure.

The often overlooked security problem in a repair shop is when all or part of the watch must be sent by mail or carrier to a third party for a special service. Dials must be sent to the refinishing company and damaged cases must be sent to the case maker or jeweler. Some parts must be sent to a material house for matching and finally some watches must be returned by mail to the customer. All of these situations create an opportunity where trouble can and does happen.

I am aware of a watchmaker who sent a number of dials from very expensive watches in a package to a dial refinishing company. The package was adequately insured and sent on its way. Unfortunately, the parcel truck containing the package was hi-jacked before the dials arrived at the refinishing company and the contents of the truck were gone and never recovered. Yes, the dials were insured, but you can be assured that there were many unhappy watch owners who now had some cash and watches without dials. The watchmaker involved neglected to inform the owners of the watches that the dials were being shipped via a parcel service and there was some risk. The watchmaker now explains to each customer the risk involved with sending a watch or any part of it to a third party for service. The customer chooses the method of shipping and the level of risk he is willing to take. Registered U.S. mail is the most secure and the most expensive. The parcel services are insured but probably not as secure. First class mail is a good low cost option if the customer is willing to accept the loss of his watch in the mail. Customers must be made to understand that nothing is perfect. A plane carrying registered mail can crash and mail trucks can be hi-jacked.

Other things that can go wrong with third party services include theft and fire at third-party premises. We

Continued on page 43.

TECHNICALLY WATCHES

ANTIQUE WATCH RESTORATION, PART CXXXII

ADJUSTING WATCHES TO TEMPERATURE

By Archie B. Perkins, CMW, FNAWCC, FBHI
© 1996 (All rights reserved by the author)

The temperature error in watches is caused mainly by the changes of elasticity in the hairspring under different temperature conditions. The hairspring becomes longer and weaker in heat and it becomes shorter and stronger in cold. When the hairspring becomes weaker in heat, the watch loses time. Also, when the hairspring becomes stronger in cold, the watch runs faster. These conditions can be corrected with a compensating balance wheel.

A compensating balance wheel is one that becomes smaller in diameter in heat and larger in diameter in cold. This compensates for the changes of elasticity in the hairspring.

Plain Balance Wheel (Uncompensated)

Some of the early watches had balance wheels that did not compensate for change in the elasticity of the hairspring. Figure 1 shows one of these balance wheels. This is a solid rim wheel which has no means for compensation. These wheels were made from different materials such as brass, steel, nickel silver, and sometimes gold. This type of balance wheel was used in some English, Swiss, and early American watches, especially in verge and cylinder watches. This style of wheel was also used in some lever watches.

In verge watches, the balance wheel had a thin flat wide rim. The verge balance wheel was usually made of steel. Some uncompensating balance wheels were made from brass with solid rims and balance screws. Others had an uncut bi-metallic brass and steel rim and arm with screws. An uncut bi-metallic brass and steel rim wheel cannot compensate for the changes in elasticity of the hairspring. The rim must be cut for the wheel to act for compensation.

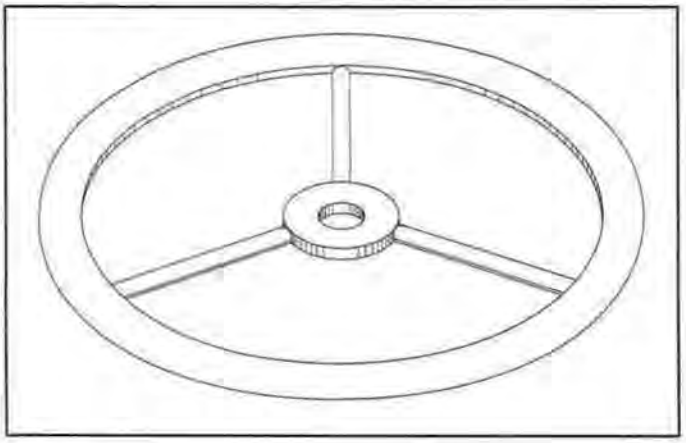

Figure 1.

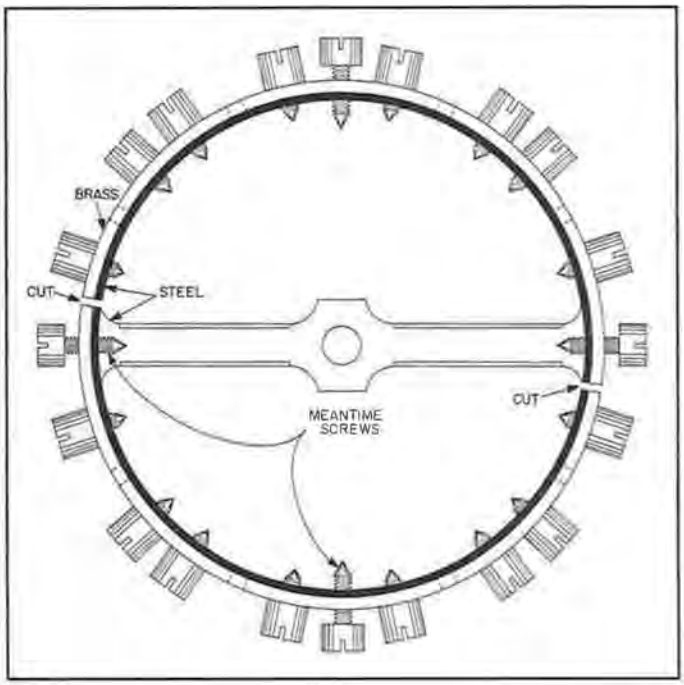

Figure 2.

The Bi-Metallic Cut Balance Wheel

Figure 2 shows a bi-metallic cut balance wheel which is used with a steel hairspring to compensate for the changes of elasticity in the hairspring when the watch is subjected to heat and cold conditions. This wheel has a steel arm and a steel inner rim fused to a brass outer rim forming a bi-metal rim. The bi-metal rim is cut near the ends of the arm at positions that are exactly opposite to each other forming two segments to the rim.

The four screws with long threads in the balance wheel's rim are called meantime screws. These screws are used to change the meantime of the watch only. When these screws are moved inward, the watch becomes faster. When these screws are moved outward, the watch becomes slower.

The heads of meantime screws should always be at equal distances from the wheel's rim. These screws should be in pairs in holes directly opposite to each other. Meantime screws are used in higher grade watches. Some balance wheels have only one pair of meantime screws. Higher grade balance wheels have two pairs of meantime screws. On balance wheels with only one pair of meantime screws, the screws will be at or near the ends of the arm. When the balance wheel has two pairs of meantime screws, they will be positioned at 90° to each other as shown in Figure 2.

The other screws with full-size heads in the balance wheel are used for weight and are shifted to and from the ends of the segments when adjusting the balance for temperature changes. Any screws in a balance wheel which have heads that are shorter or smaller in diameter than full head screws are called timing screws.

The Principle of the Bi-Metallic Balance Wheel

Figure 3 is used to illustrate the principle of the bi-metallic balance wheel. View A shows a steel bar and a brass bar. When these bars are subjected to heat, they will have a linear expansion as shown in broken lines. The brass bar expands more in a given heat than does the steel bar. Also, the brass bar will contract more than the steel bar in cold.

View B, Figure 3 shows the brass and steel bars after they have been fused together as they would be in the rim of a balance wheel.

View C, Figure 3 shows the action of the two metals when they are subjected to heat. The brass section expands more than the steel section which causes the bar to curve toward the steel section. The steel section tends to stabilize the bar.

View D, Figure 3 shows the action of the bar when it is subjected to cold. In this case, the brass contracts more than the steel causing the bar to curve toward the brass section.

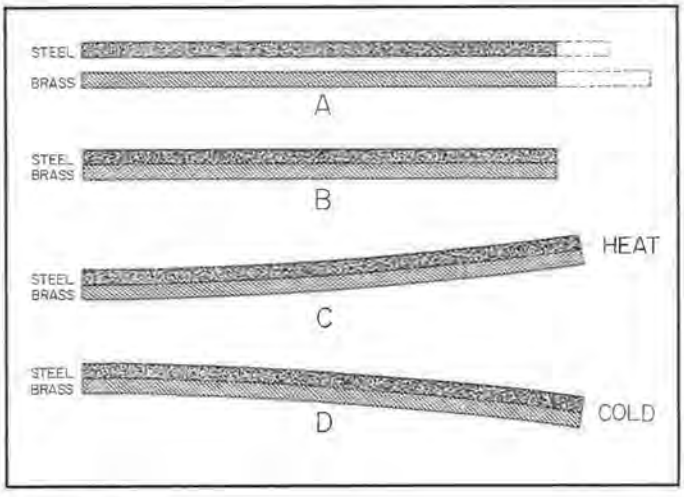

Figure 3.

The Effect of Heat on a Cut Bi-Metallic Balance Wheel

Figure 4 shows the effect of heat on a cut bi-metallic balance wheel. The length of the arm increases some but the greatest change is at the end of the two segments. The ends of the segments go inward which decreases the diameter of the balance at these points. (Note: The effect shown is greatly exaggerated for a normal heat range. The wheel would need to be heated quite hot to cause this much distortion in the rim.) This decrease in diameter makes the watch faster to compensate for the decrease in the elasticity of the steel hairspring which makes the watch slower.

The Effect of Cold on a Cut Bi-Metallic Balance Wheel

Figure 5 shows the effect of cold on a cut bi-metallic balance wheel. The length of the arm decreases some but the ends of the segments show the greatest change. The ends of the segments move outward which increases the diameter of the balance wheel. This increase in the diameter

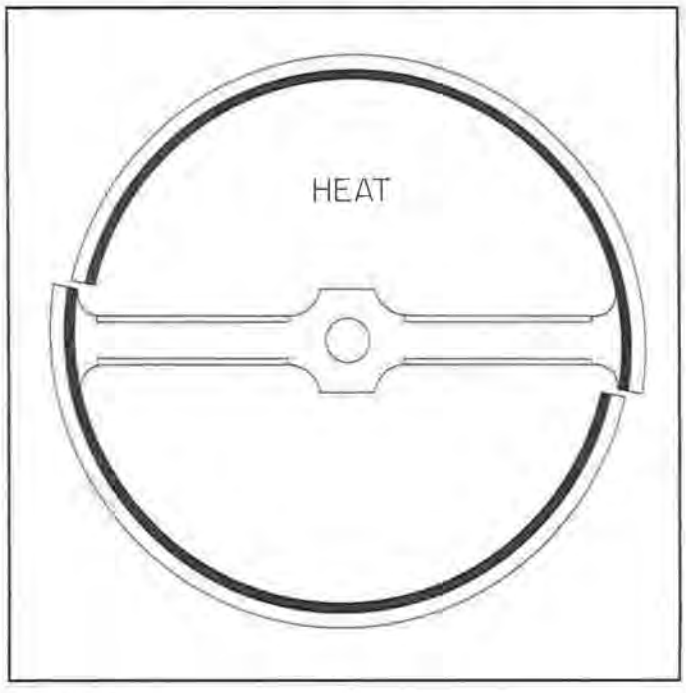

Figure 4.

of the balance wheel slows the watch down to compensate for the fastness of the watch caused by the hairspring becoming stronger in a cold condition. Again, the illustration shows the segments in an exaggerated position.

Adjusting a Watch to Temperature

Figure 6 is used to illustrate how the screws are moved on the segments of the balance wheel when adjusting a watch to temperature. First of all, no screws should be shifted in the holes in the balance rim unless it is known that the watch needs to be adjusted to temperature. Secondly, the meantime screws should never be shifted to other holes in the rim as long as they are in their correct holes. Thirdly, if a watch is already adjusted to temperature, any shifting of the screws in the holes will destroy the temperature adjustment.

To determine if a watch is adjusted to temperature, it is tested in a cold box which has a constant temperature of 40° F. Then, it is checked in an oven which has a constant temperature of 90° F. The cold box can be the refrigerator which normally maintains a temperature of 38° to 40° F. The oven can be a small metal cabinet equipped with a light bulb or bulbs that are thermostatically controlled to maintain a constant temperature of 90° F. It is best to test the watch for 24 hours in each of these two temperatures. When a watch is adjusted to temperature, it should keep the same time at 40° F as it does at 90° F.

Middle Temperature Error

Although a watch is adjusted to keep the same time at 40° F and 90° F, it may show an error at temperatures between 40° F and 90° F. The watch will be fast at a temperature halfway between 40° F and 90° F and will be slow at temperatures outside of these two temperatures. This error is called the middle temperature error. This error is due to the differences between the changes in elasticity in the hairspring and the compensating effect of the brass and steel compensating balance wheel. The changes in the strength of the steel hairspring in heat and cold is not proportional to the compensating effect of the brass and steel compensating balance wheel. This error cannot be eliminated when using a steel hairspring with a brass and plain steel compensating balance wheel.

Moving the Screws when Adjusting to Temperature

In Figure 6, the screw holes are numbered and the screws are identified by a letter for instructional purposes. Suppose we have a watch which runs slow at 90° F and fast at 40° F. This indicates that the balance wheel is undercompensated. This is corrected by moving one or more pairs of screws toward the ends of the segments. The screws moved and where they are moved to depends on how much effect is needed. For the greatest effect of moving one pair of screws, we would move screws H and H1 to holes 1 and 1A. The reason that this move gives the greatest change is that screws located on the solid part of the rim within 25° of the arm are in a neutral area on the rim. This point on the segment moves very little under heat and cold conditions, so moving screws from this neutral area to the end holes in the segment gives the greatest results. The smallest result is gotten by moving screws F and F1 to holes 9 and 9A. The maximum results obtained by moving screws would be to move F, G, and H and F1, G1, and H1 to holes 1, 3, and 5 and 1A, 3A, and 5A.

If we have a watch that runs too fast at 90° F and too slow at 40° F, the screws would be moved from the ends



Figure 5.

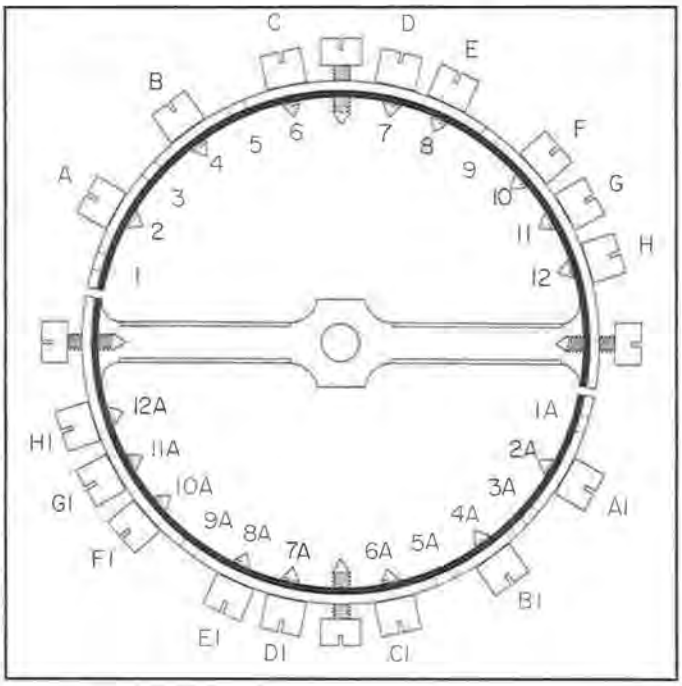

Figure 6.

of the segments toward the ends of the arm. Screws should be moved in pairs that are positioned opposite each other and moved to holes that are opposite each other. The meantime screws should never be moved to adjust a watch to temperature. Each time a pair of screws are shifted to other holes in the wheel the watch must be tested under heat and cold conditions for the results of the move. After a watch has been adjusted to temperature, the balance wheel must be repoised. Moving screws can change the poise of the balance wheel.

The Undercompensated Balance Wheel

Figure 7 shows a bi-metallic balance wheel that is undercompensated. This is indicated by the way the screws are distributed on the rim of the wheel. Since the screws are grouped at the ends of the segments, this indicates that the segments did not move inward enough to compensate for the changes of elasticity of the hairspring when the watch was subjected to heat. The screws were moved toward the ends of the segments in an effort to speed the watch up as much as possible. The cause of this undercompensated condition is that the proportion of brass in the rim of the wheel is too little compared to the amount of steel. There is not enough brass to move the segment far enough to properly compensate for the changes of elasticity in the hairspring. This condition can sometimes be improved by placing heavier screws such as gold or platinum screws near the ends of the segments and lighter screws toward the center of the segments. The total weight must remain the same for the watch to still keep the correct time.

The Overcompensated Balance Wheel

Figure 8 shows a balance wheel with a screw arrangement that indicates that the wheel is overcompensated. This means that there is too much brass in the wheel's rim compared to the amount of steel. This causes the ends of the segments to move in and out too far in heat and cold. The screws needed to be grouped near the ends of the arm in an effort to adjust the balance to temperature. This condition can be improved by placing heavier screws in the holes near the arms and lighter screws near the ends of the segments. The proper proportion of brass and steel in a bi-metallic balance wheel rim is 3 to 2. The brass should be 3/5 and the steel 2/5. If a bi-metallic balance wheel has the proper proportion of brass and steel, the screws should be equally distributed around the rim after the balance has been adjusted to temperature. A good example of this is shown in Figure 2.

The Elgin Invar Bi-Metallic Balance Wheel

One important advancement in bi-metallic compensating balance wheels came about shortly after 1900. A nickel steel alloy was developed by Dr. Charles E. Guillaume. He called this new alloy "Invar" which came from the word invariable. This nickel steel alloy contains from 36% to 44% nickel and has an extremely small coefficient of expansion. The Invar alloy is used for the arm and inner part of the wheel rim in place of the regular steel. The brass is used on the outside of the rim as before. The proportions of brass and Invar in the wheel's rim is 4/7 brass and 3/7 Invar. This balance wheel is referred to as the Guillaume balance or Invar balance. When Invar is used to replace the plain steel in the wheel, the middle temperature error is eliminated. Figure 9 shows an Elgin Invar balance wheel.

The rim of the Invar balance wheel is cut at a point

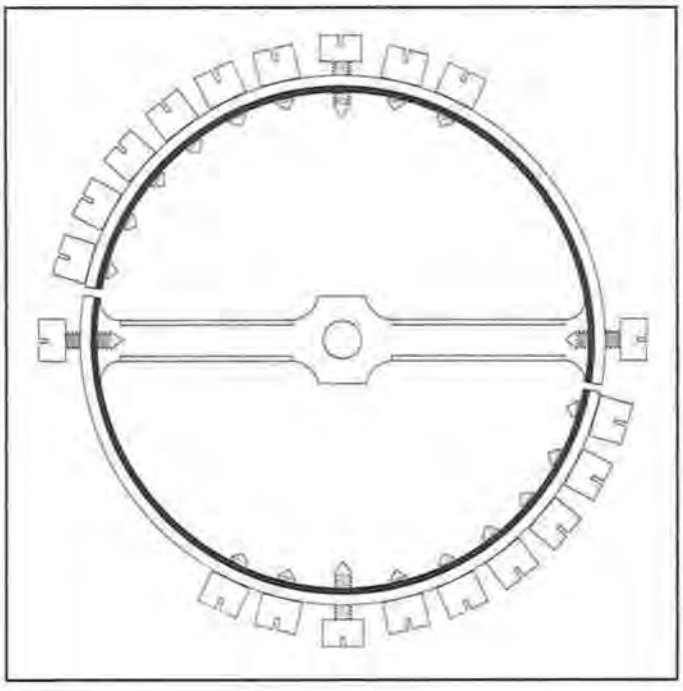

Figure 7.

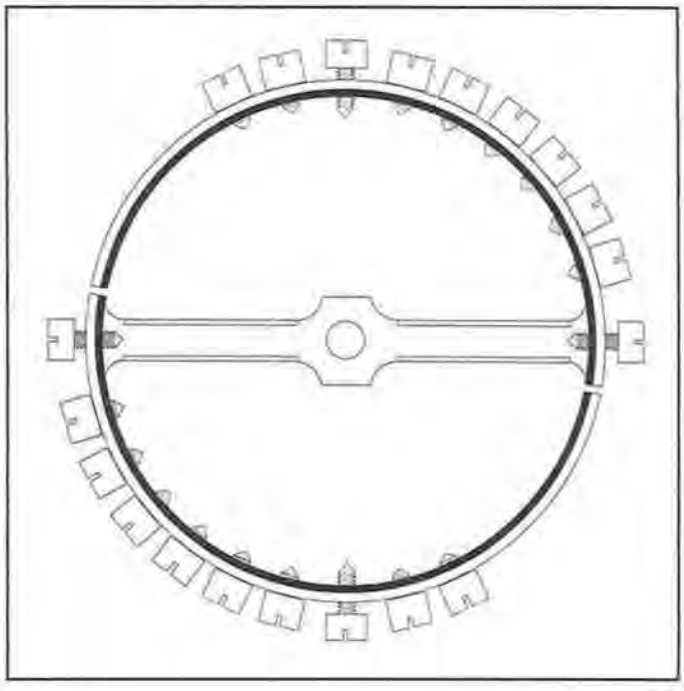

Figure 8.

that is further from the arm than the regular bi-metallic balance wheel. The rim of a regular bi-metallic balance is cut at about 13° from the center of the arm; whereas, the Invar balance is cut at a point that is at least 35° from the center of the arm. A brochure from the Elgin Company states that their Invar steel balance wheel is cut 35° from the arm. However, a 16 size Elgin balance wheel in possession is cut at 60° from the center of the arm. Also, a 12 size Elgin balance wheel in possession is cut 70° from the arm. Figure 10 shows the position of the cut in the rim of the balance wheel of a 12 size Elgin thin special model watch. An Elgin Invar chronometer balance wheel is cut at 90° from the arm. The main reason this Invar balance wheel is cut farther from the arm is to decrease the effect of the centrifugal force on the rim of the wheel. This also improves the isochronal error. When the rim of the wheel is cut at the arm, this leaves a long segment which is weighted with heavy screws near the end of the segments. When the balance is taking long arcs of motion, the segments tend to move outward causing the watch to run slower. When the motion becomes less as the watch runs down, the segments do not move outward as much which causes the watch to run faster. The main point is that when the wheel is cut closer to the center of the rim between the ends of the arm, we will have four short segments in the wheel instead of two long ones. The centrifugal force will have less effect on the short segments.

The Ditisheim "Affix" Balance Wheel

Dr. Guillaume continued his researches in metals that were not affected by temperature, and in 1913 he invented an alloy of nickel-steel with a percentage of chromium. He named this material "Elinvar." Derived from "elasticity invariable," this material was used for hairsprings as well as balance wheels. This combination of hairspring and balance wheel almost eliminated the temperature error entirely.

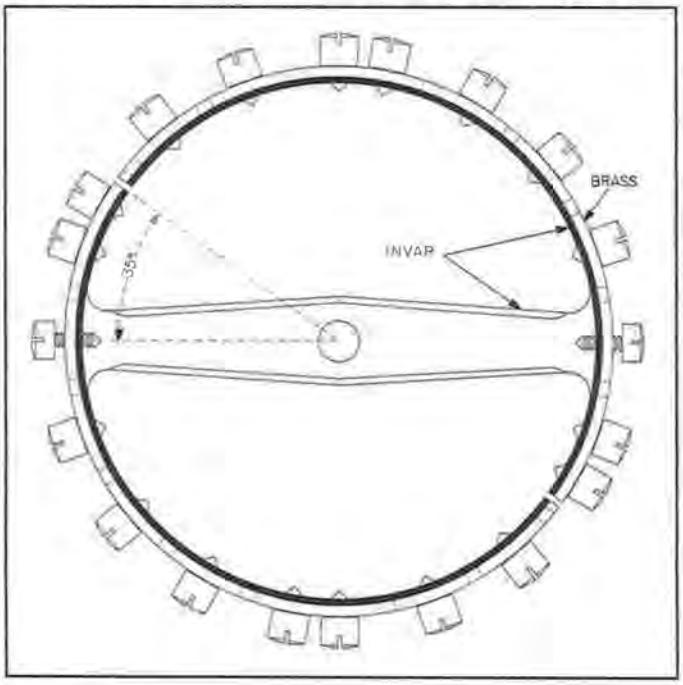

Figure 9.

The next refinement to the balance wheel in an effort to completely remove any temperature error was done by Paul Ditisheim. He made a solid non-magnetic balance wheel on which he added two short bi-metallic curbs to the rim of the wheel. Screws could be adjusted along the bi-metal strips to remove any residual temperature error. (See Figure 11.)

"Antique Watch Restoration" will continue next month.

Illustrations continued on page 39.

BIBLIOGRAPHY

Britten, F. J. *Watch and Clock Makers Handbook.* New York: D. Van Nostrand Co., 1955, pp. 19-33.

DeCarle, Donald. *Practical Watch Adjusting.* London: N.A.G. Press, 1964, pp. 132-138.

Elgin National Watch Co. *The New Invar Steel Balance Brochure.* Chicago: (no date, 6 pages).

Gould, Rupert T. *The Marine Chronometer.* London: The Holland Press, 1960, pp. 172-208.

Hamilton Watch Co. "Technical Data Sheets TD 113, TD 115," (1941-45) and "Technical Bulletin 200," (1947).

Haswell, J. Eric. *Horology.* London: Chapman and Hall, 1951, pp. 146-164.

Illinois Watch Co. *Elinvar Booklet.* Springfield, Illinois, 1931, 23 pages.

Jendritzki, H. "Watch Adjustment," *Swiss Watch and Jewelry Journal.* Lausanne, Switzerland: 1963, pp. 6-13.

Kleinlein, Walter J. *Rules and Practices for Adjusting Watches.* 1948, pp. 19-28.

Rawlings, Arthur L. *The Science of Clocks and Watches.* New York-London: Pitman Publishing Corp., 1948, pp. 143-151 and 201-207.

Waltham Watch Co. *Watchmakers Handbook.* 1945, pp. 3-5.

1996 INDEX

A complete index for 1996 issues of *Horlogical Times* will appear in the January, 1997 issue.

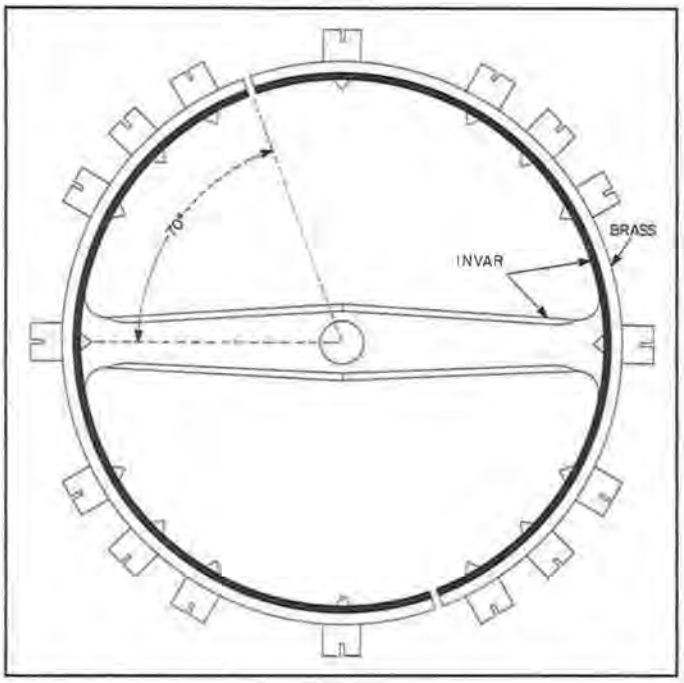

Figure 10.

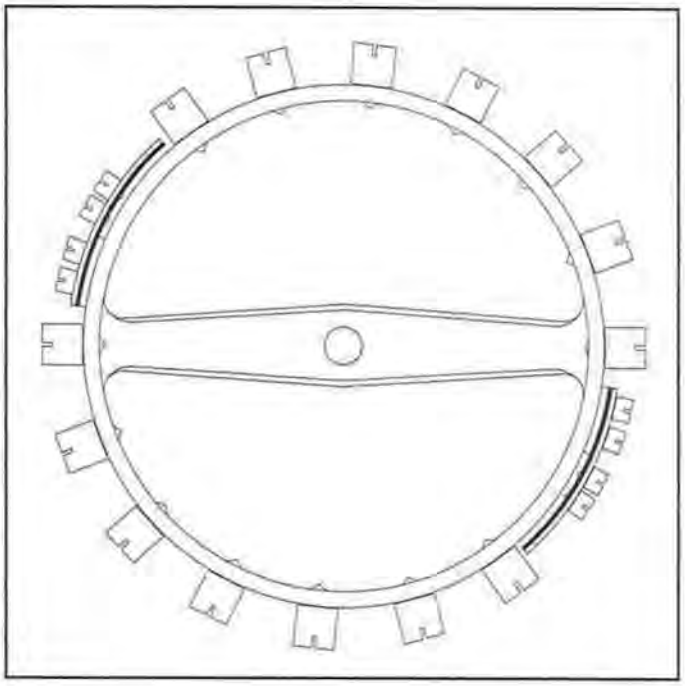

Figure 11.

AN IMPORTANT MESSAGE FOR WATCHMAKERS AND RETAIL JEWELERS

Within the past few years, there have been numerous voluntary reports from our members—and others—to the effect that various Swiss makers (for the most part, high end) are refusing to provide spare parts for their watches to supply houses and watchmakers. Instead, these makers require that a customer's watch be sent to their own facilities for service. Very often, this turns out to be far more expensive to the customer than if a repair were performed by a qualified watchmaker with whom the customer deals directly. Further, of course, this practice adversely affects the livelihood of such qualified watchmakers. AWI management has earnestly discussed this problem (which seems to be following a pattern among the various makers) with several of these makers, but has met with very limited success. We are therefore now interested in hearing from members, and others, with more detailed accounts of their experiences (and copies of any supporting correspondence which they might have) which demonstrate refusal by specific Swiss makers to provide spare parts. This information should be addressed to the AWI Task Force for Spare Parts, c/o AWI Central.

Turns For Watch And Clock Making

Part 2

By Ron DeCorte, CMW

In the first part of this article some of the fundamental aspects of working between centers were examined. In these next two parts we will go through the process of making a balance staff.

The objective of this series of articles is to fill some gaps and lend a bit of personal insight into the subject. There is a wealth of material available on this subject if you are willing to look for it and study. Experimentation and practice will also be of great reward.

Obtaining the proper measurements is the first step in this project. Good measuring tools are a requirement to any job of this type. I would suggest that one or more of the bench micrometers shown in Figure 6 be obtained if possible. The vertical spindle model (center) is my personal favorite for gathering measurements from the movement. The horizontal dial micrometer (left) is excellent for checking the dimensions of the staff as you proceed. A good handheld micrometer or one of the many different types of comparative measuring tools that have been made over the years are also acceptable. A 100 or 150 mm caliper or a small set of fine-point dividers will be quite helpful if you are roughing out the staff without the aid of a cross slide. The dividers can be set against a caliper or other fine scale and then held alongside the work for comparing.

In order to measure the roller table, balance, and hairspring hole diameters a different set of measuring tools are required. The simplest way to check small holes is to turn a piece of brass slightly tapered until the component starts on and stops. Gently remove the component and note the mark it made on the freshly cut brass. Use a precision micrometer and check the diameter at the mark. A commercial-made precision hole gage is also a good tool if available. Don't forget that the holes in most roller table assemblies are tapered and should be checked at both ends. The old saying "measure twice and cut once" could not be put to better example.

Make a sketch or detailed drawing of your staff. The quality of the final drawing is not important except to the person who will do the work. Some people choose to work on the computer while others will be happy with a sketch on the inside of a matchbook. The final choice is yours.

Roughing out the staff is the next step. Personally I like to use a good collet-holding lathe with high-quality collets and a cross slide for this work as shown in Figure 7. If you do not have a cross slide, it is perfectly acceptable to work free hand. Start out with a (soft) piece of either oil or water hardening steel larger than the largest diameter of the staff. Leave slightly more than the total length of the staff protruding from the collet and turn, file, or stone a

The simplest way to check small holes is to turn a piece of brass slightly tapered until the component starts on and stops. Gently remove the component and note the mark it made on the freshly cut brass. Use a precision micrometer and check the diameter at the mark.

90° point on the end. Using a strong loupe, check the point for sharpness and truth. Turn the upper portion of the staff up to and including the balance diameter, leaving the diameters about 0.03 mm and the shoulders about 0.01 mm oversize for finishing later. Leave the point about 0.03-0.05 mm long. This will allow for wear when turning between centers and for finishing with the Jacot lathe. Do not forget to leave about 0.03 mm for the balance rivet. Turn the lower portion of the staff grossly oversize and then part off at an exaggerated length with a graver that will leave a point on the lower end. Reverse the staff and hold with a collet on either the balance or hairspring diameter. If you use the balance diameter be very careful not to distort it by clamping the collet too tightly. Use a female center in the tailstock to help get the point running true. The point that was made when parting off will most likely need to be sharpened and shortened. As with the upper point leave the lower point about 0.03-0.05 mm long and check the truth with a strong loupe. Finish roughing the lower end of the staff, leaving the diameters and shoulders oversize the same amount or slightly more than you did with the upper end. You might consider roughing out a second staff as a back-up in case of an accident later when finishing the pivots. When this stage is complete your staff should look similar to Drawing A.

The staff is now ready to be hardened and tempered. Dip the part in some liquid soap or rub on a bar of hard soap. This will help prevent scale from building up on the steel surface when hardening. A small metal container with an open top and strong wire handle should be used to hold the staff when heating. I use a spent 9 mm pistol casing with a piece of wire wrapped around as a handle. Move the container through the flame of your torch until the container begins to glow cherry red. Remove the container from the flame and watch as the staff gathers heat and obtains the same color as the container. At this point the container is dipped quickly into the oil or water for the quench. Clean the staff in some alcohol, place in the collet lathe and polish with a fine stone or emery stick. This will allow the color changes to be visible when tempering. After polishing, clean in alcohol again and place in a small pan



Figure 6.

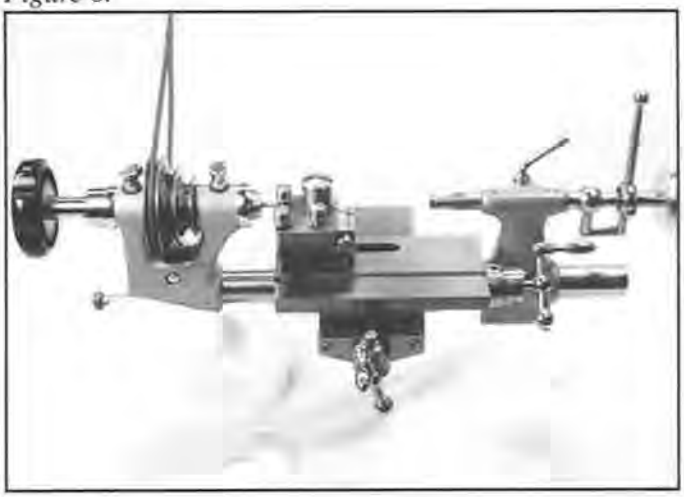

Figure 7.

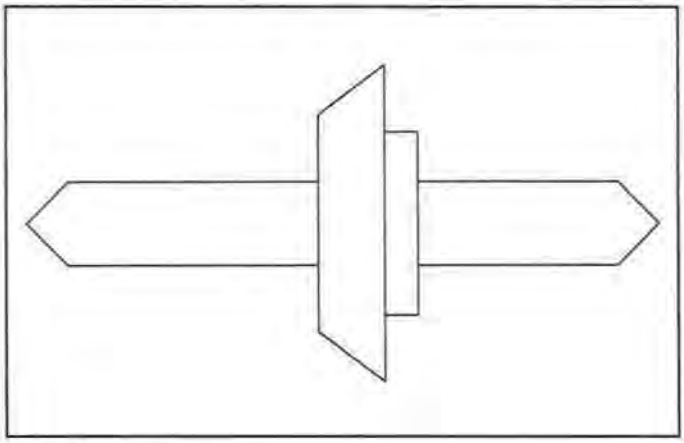

Drawing A.



Figure 8.

or spoon for tempering. Use an alcohol lamp to bring the staff to a dark blue color and let cool slowly.

The staff is now ready to be placed between centers for final turning and finishing.

Proper carriers must now be selected or fabricated. Figure 8 shows a set of commercially available carriers that are handy to have. If you don't have a set of carriers, or if nothing in the set is the right size, you can use an old wheel or metal disc broached for a tight fit and then attached with shellac or instant cement. If you use shellac or cement make *absolutely* sure that all of the residue is removed from the corners before fitting the balance and roller table(s) later. Check that the carrier is not wobbly or it may interfere with the tool rest or the graver when turning.

Select a pair of centers for holding the staff in the turns. The size of the centers should be as large as possible, allowing you to turn all of the diameters (except the pivots) without interfering with the graver.

Everything is now ready for turning. Place the staff between centers and adjust for proper alignment. It is very important that the work be aligned parallel with both axes of the lathe. If the work is askew it will be difficult to turn and may become dislodged easily. The pressure exerted by the centers is also very important. Gentle but firm is the best advice I can give. You will be removing and replacing the staff many times before you are finished. Each time you move the tailstock runner away and then back it will require an alignment process.

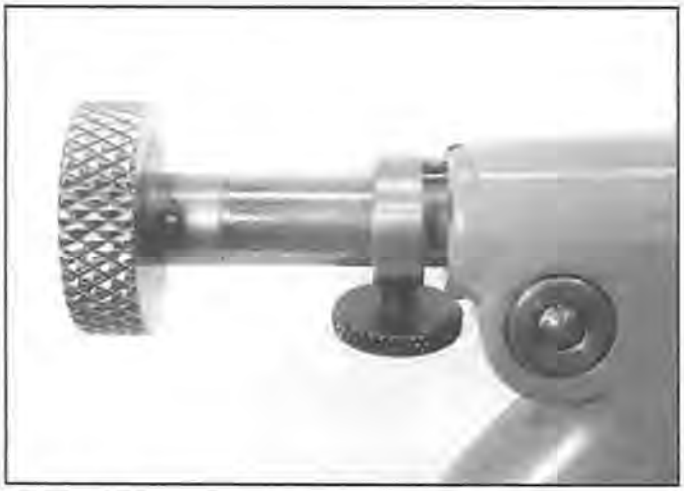

Figure 9.

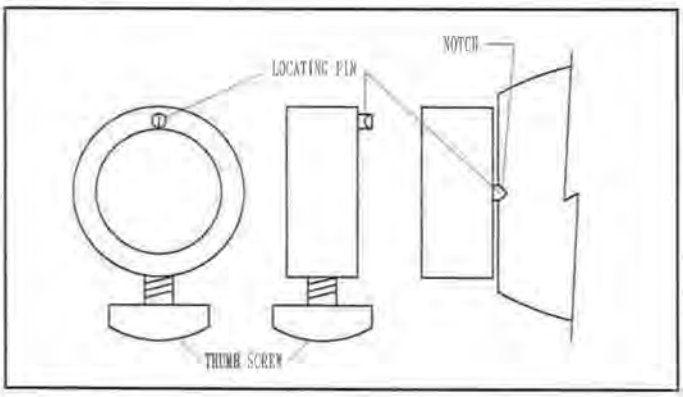

Drawing B.

Figure 9 shows a very simple memory device for the tailstock runner. It is very easy to make and will save a lot of time later. Drawing B shows three views of this ring. It is made from brass or steel about 5 mm long and should just slip over the runner. The locating pin is tempered steel and is filed to a 90° point. A small shallow notch is filed into the end of the tailstock to accommodate the tip of the locating pin. Once the runner has been positioned for proper alignment of the work, the locating pin is mated with the notch in the tailstock and the thumb screw is tightened to secure the ring in place on the runner. Each time the runner is moved to load or unload your work the runner can be replaced to the exact original position.

All of the large diameters will be finish-turned and then ground and polished to size. The pivots will be finished last.

Generally, I suggest starting your work on the upper end of the staff. I like to finish the balance diameter and hub first. This allows me to put a carrier on the balance diameter and flip the work end-for-end at any time without having to change carriers. When turning between centers, make certain that your tool rest is as close to the work as possible and your graver is very sharp. Do not try to turn the work at high speed as this will only work-harden the steel and wear the points. Practice and experience are the best teachers in this, as in all other disciplines. Turn all diameters true and about 0.01 mm oversize. Use the components that will reside on these diameters as gages.

In the next installment of this article we will grind and polish the large diameters and then turn and finish the pivots.

Continued from page 33.

find that most customers understand the risks involved and appreciate the explanation. If it seems too cumbersome to bother with these precautions, ignore them and eventually you will have a loss. Of course, Murphy's law will apply here. You will not lose a common dial that can easily be replicated, but you will lose the rare part that cannot be replaced and you will be in the uncomfortable position of explaining to the owner of the watch that you neglected to ask his permission to ship part of his watch to another state.

The same precautions apply to shipping or mailing completed work. In the case of a loss, the carrier's insurance will only pay money to the customer if the item is lost. Again if the watch owner does not understand that or is in any way uncomfortable, the watchmaker should not accept the work.

Jack Kurdzionak

Opening Screw Back Cases

A piece of rubber material cut from a bicycle inner tube can be helpful in opening screw back pocket watch cases. Place the material over your palm and the increase in friction will greatly assist the opening of a stubborn case back. This is especially helpful for the counterfeit Rolex-type screw backs.

Stan Craig in the
Maryland Horological News

When a Screw Back is a Snap

Be especially careful in opening what appears to be a screw back case on a low cost quartz wristwatch. Many of these are actually snap-on case backs made to appear as threaded ones. Before attempting to unscrew a case back, it is beneficial to check for a lip or undercut where a case opening blade can be placed. Just because a case back has a knurled edge or notches for a spanner wrench does not mean that it is a threaded case back.

It is very difficult to unscrew a snap back case, but if you are successful in turning the case back, you may break the stem because the notch in the case back that accommodates the stem will shear the stem when the back is turned. The counterfeit watch industry does a good job disguising the true nature of their products.

Jack Kurdzionak

SEEKING PROSPECTIVE CANDIDATES FOR THE AWI BOARD OF DIRECTORS

The committee involved with securing candidates to run for the AWI Board of Directors is seeking recommendations from the membership. If you plan to suggest a possible candidate, please send that individual's name and background to: Chairman, Nominations for Board of Directors Committee, AWI Central, 701 Enterprise Drive, Harrison, Ohio 45030.

Each recommendation will be carefully considered by the committee. Candidates will be selected on the basis of their past local association or AWI experience, geographical location, present job status, horological experience, and willingness to serve.

Recommendations must be received before December 31, 1996 for them to be considered for the 1997 election.



THE 1997 LATHE PROGRAM

Instructor—Roy A. Hovey

The 1997 Lathe Program has been designed with the following objectives in mind:

1. To serve the educational needs of all watchmakers and clockmakers holding memberships in The American Watchmakers-Clockmakers Institute who use watchmakers lathes or micro-lathes in their work.
2. To support members preparing to take examinations conducted by The American Watchmakers-Clockmakers Institute which require the use of lathes, micro-mills, and wheel cutting equipment.
3. To provide all members of the horological community seeking to develop their skills on micro-mills and wheel cutting equipment with the best instruction available.

The 1997 Lathe Program will retain all of its traditional characteristics. Several improvements have been made in both the bench courses and in the Project Extend resident program. As of this fall, all members interested in attending specific lathe courses while the new 45-week Academy of Watchmaking is in session are welcome to do so on a space available basis. The teaching points will be the same in both the bench courses and resident programs, and several new projects have been added to the 1997 Lathe Program.

Each of the Watchmakers Lathe Program blocks of instruction are shown in Table I. Several of these blocks lend themselves to being used as independent courses. Most of the courses on this table can be specially tailored to support educational programs sponsored by state organizations, affiliate chapters, and schools. Groups can often be given a voice in constructing their own curriculum, providing the existing blocks of instruction shown in Table I are used in the process.

Considerable progress has been made in providing a program of instruction for the micro lathe owners that parallels that of the 1997 Watchmakers Lathe Program. These courses are shown on Table II. Because of the considerable differences existing between watchmakers lathes and micro lathes, an appropriate series of projects that are particularly well suited for these machines has been developed. In most instances micro lathe program participants can proceed into the Watchmakers Lathe Program Phase IV and Phase V courses if their machines can be fitted with a suitable tool rest for hand-held cutting tools.

For those interested in obtaining a general overview of the 1997 Watchmakers Lathe and Micro Lathe programs, a one-day introductory lathe course is available. This course was designed to be conducted in conjunction with state conventions and annual guild meetings. Attendees registering for this course can expect to learn how to maintain the watchmakers lathe, how to prepare cutting tools and how to use them. Affiliate chapters and state organizations can make arrangements with AWI Central to have this course conducted during their conventions. Introductory lathe courses tailored to support joint educational activities AWI conducts in conjunction with other horological organizations are available and can be presented when appropriate arrangements have been made through AWI Central.

Every effort has been made to provide the student with something worthwhile at the end of each block of instruction in the 1997 Lathe Program. Most of the material has been pre-machined so very little class time is required to assemble student projects. The tools and lathe accessories the student makes during these courses are his to keep and their value far outweighs the cost of the materials. Students will have the option of bringing material to make their own cutting tools or it can be purchased as needed while the course is in progress.

Considerable success has been experienced with the teaching concept being used in the current lathe program. This concept is designed to provide a learning experience that instills confidence in the student. It is accomplished by using a progressive building block pattern. In the basic courses, the student learns new skills using fairly large work pieces. As the program progresses, the student continues to refine the

skills already learned while working with smaller and smaller components to develop his confidence. Each block of instruction is designed to add new skills while providing continued reinforcement of those already mastered.

The participation of guest instructors has always been a major part of the lathe program. A special word of thanks is extended to Mr. Jim Huckabee and Mr. Fred Burckhardt for their support of the lathe program during bench courses conducted in their native state of Texas during 1996. Greg Hostetter's participation as a guest instructor in Minnesota is also greatly appreciated. Another special word of thanks goes to those individuals who helped to organize and support bench courses by giving their time or by providing specialized equipment. Those serving in this capacity in 1997 who deserve special recognition are Nino Gonzalez, George Kiser, Sue Ann Wysong, Chris Wiles, David McClellan, Russell Aikins, Mike Mishou, Kern Schwartz, Richard Zielike, Jeff Pomeroy, and Milo Bresley.

Each block of instruction offered in the Project Extend Resident program will be made available to those who elect to participate in the 1997 Bench Course Lathe Program. Phase I, Phase II, and Phase III will normally be broken into four-day segments. The instructor will return to the same city three times to present each of these segments unless the students select another scheduling pattern. Phases IV and V will normally be offered in a four- or six-day configuration in both the resident and bench course programs. These courses can also be tailored to meet the needs of the group requesting them. Due to limitations on how much equipment can be carried, some minor differences exist between the Phase IV and Phase V Project Extend Resident and Bench Course Programs.

Individuals or groups interested in making arrangements to have The Lathe Program presented in the resident or bench course configuration are welcome to make inquiries regarding scheduling and fees with AWI Central. Groups or individual members interested in obtaining an illustrated publication which presents an account of what is to be accomplished during each day of the program may obtain a copy of the student handout titled The Lathe Program from AWI Central. Affiliate chapters and guilds are welcome to obtain copies of this pamphlet and reproduce copies for their members. Brochures for each course of instruction shown on Table I and Table II will be available after January 1, 1997.

Cowells 90CW Lathe

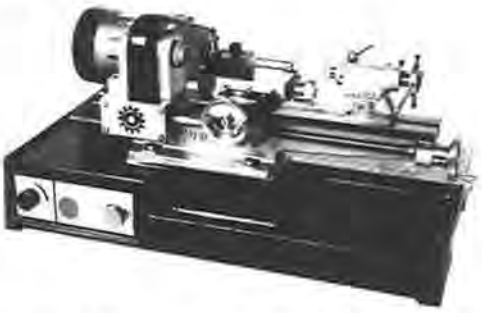

THE ULTIMATE HOROLOGICAL METAL TURNING MACHINE

- Accepts most standard 8 mm horological collets and accessories
- Solid cast-iron lathe bed
- Powerful motor with an electronic speed control
- Collet-holding tailstock with a sensitive lever feed
- Full range of accessories designed for horological work

Information packet available for $4.50 from:

COWELLS, USA
BOX 843
RICHMOND, KY 40476-0843

PHONE (606) 624-9269
FAX (606) 625-1191

FINE TRADITIONAL BRITISH QUALITY

BACK IN STOCK

***HOROLOGICAL TIMES* ANNUAL BINDERS**

Preserve a full year's volume of your *Horological Times* in this handsome, embossed, 12-spine binder

1 Binder	**$13.50 ea. + s&h**
2 Binders	**$13.00 ea. + s&h**
3 or more Binders	**$12.50 ea. + s&h**

$3.00 shipping & handling per binder

Order from AWI Central/*HT* Binders
701 Enterprise Drive
Harrison, OH 45030

Check Money Order

TABLE I THE 1997 WATCHMAKERS LATHE PROGRAM

INTRODUCTORY COURSE		
Introductory Courses (One Day)	WATCHMAKERS **Introduction to the Watchmakers Lathe Program** The student will receive an overview of the lathe program, turning theory and cutting tools.	CLOCKMAKERS **Introduction to the Clockmakers Lathe Program** The student will receive an overview of the lathe program, turning theory and cutting tools.
SKILL DEVELOPMENT COURSES		
PHASE I **Course 1** (Two Days) Request Phase I Brochure	WATCHMAKERS **Basic Lathe Operations for the Watchmaker** The student will prepare steel and carbide cutting tools. He will make a set of jewel pushers and six staking tools.	CLOCKMAKERS **Basic Lathe Operations for the Clockmaker** The student will prepare steel and carbide cutting tools. He will make a boxwood chuck arbor and a set of five clockmakers punches.
Course 2 (Two Days)	**Lathe Accessories for the Watchmaker** The student will construct a set of brass cement chucks, a precision grinding arbor, a tailstock drilling pad, and a filing rest with a micrometer adjusting mechanism.	**Lathe Accessories for the Clockmaker** The student will make a lantern pinion drilling guide, a precision grinding arbor, a tailstock drilling pad, and a filing rest with a micrometer adjusting mechanism.
PHASE II **Course 1** (Two Days) Request Phase II Brochure	**Watch Wheel Blanks and Arbors** The student will make an arbor and a wheel blank. These components will be mounted to make a watch wheel ebauche. He will also make a chronograph idler wheel ebauche.	**Clock Wheel Blanks, Hubs and Arbors** The student will make an arbor, a hub, and a wheel blank for a clock. These components will be mounted to make a clock wheel ebauche. He will make a lantern pinion to include the arbor, shrouds, and trundles.
Course 2 (Two Days)	**Winding Stems and Spring Barrel Arbors** The student will make a winding stem and a winding arbor for a pocket watch.	**Winding and Function Control Arbors** The student will make an arbor to regulate the time keeping function and a winding arbor for a clock.
PHASE III **Course 1** (Two Days) Request Phase III Brochure	**Turning Watch Staffs Between Centers, Repivoting and the Use of the Jacot Tool** The student will cut a balance staff for an English pocket watch between centers, learn to repivot two sizes of watch wheels, and burnish pivots using the Jacot tool.	**Turning Large Marine Chronometer Staffs between Centers, Repivoting and the Use of the Jacot Tool** The student will cut a balance staff between centers for a large marine chronometer, repivot two sizes of clock wheels and burnish pivots using the Jacot tool.
Course 2 (Two Days)	**Jeweling and Cutting Staffs** The student will make a setting and secure a jewel in place. He will cut a staff for a small pocket watch using a cement chuck.	**Jeweling and Cutting Staffs** The student will turn a large jewel setting for a marine chronometer balance and secure the jewel in place. He will cut a staff for a small marine chronometer using a cement chuck.
PHASE IV **Course 1** (Two Days) Request Phase IV Brochure	**Cutting Watch Wheels Using Commercially Produced Cutters** The student will make a large watch wheel using wheel cutting equipment provided by the instructor. He will also have the opportunity to cut a small watch wheel using this equipment.	**Cutting Clock Wheels Using Commercially Produced Cutters** The student will make a large clock wheel using wheel cutting equipment provided by the instructor. He will also have the opportunity to cut a small clock wheel using this equipment.
Course 2 (Two Days)	**Cutting Watch Wheels With Fly Cutters** The student will make fly cutters and arbors to cut large and small watch wheels on equipment provided by the instructor.	**Cutting Clock Wheels With Fly Cutters** The student will make fly cutters and arbors to cut large and small wheels on equipment provided by the instructor.
Course 3 (Two Days)	**Cutting and Polishing Watch Pinions** The student will make a large pinion for a watch and use a pivot polisher provided by the instructor to finish the pivots. The pivot polisher will also be used for a simple damascening exercise.	**Cutting and Polishing Clock Pinions** The student will make a pinion for a clock and use a pivot polisher provided by the instructor to finish the pivots. The pivot polisher will also be used for a simple damascening exercise.
PHASE V **Course 1** (Four Days)	**Making Cutters for Train Wheels** The student will make a set of circular cutters suitable for cutting train wheels. This will be accomplished using hand-held cutting tools on the watchmakers lathe.	**Making Cutters for Train Wheels** The student will make a set of circular cutters suitable for cutting train wheels. This will be accomplished using hand-held cutting tools on the watchmakers lathe.
Course 2 (Two Days)	**Making Cutters for Escape Wheels** The student will make a set of specialized cutters suitable for cutting simple escape wheels. This will be accomplished using hand-held cutting tools on the watchmakers lathe.	**Making Cutters for Escape Wheels** The student will make a set of specialized cutters suitable for cutting simple escape wheels. This will be accomplished using hand-held cutting tools on the watchmakers lathe.
WATCHMAKERS LATHE SPECIAL INTEREST COURSES (Each four-day course consists of two blocks of instruction)		
Cross Slide Operations 1 (Four Days)	WATCHMAKERS The student will make a general purpose cutting tool and boring bar. He will make a key set center wheel and winding ratchet ebauche. The square will be placed in the winding ratchet using a set of broaches made on the watchmakers lathe.	CLOCKMAKERS The student will make a general purpose cutting tool and a boring bar. He will make a center wheel and a winding ratchet ebauche. He will make the square with a set of broaches made on the watchmakers lathe.
Cross Slide Operations 2 (Four Days)	The student will make a general purpose cutting tool and a boring bar. He will make a spring barrel and a fusee ebauche for an antique pocket watch using the micro-lathe or a watchmakers lathe equipped with a cross slide.	The student will make a spring barrel and a great wheel ebauche for an antique clock using the micro-lathe or a watchmakers lathe equipped with a cross slide.

TABLE II THE 1997 MICRO-LATHE AND MICRO-MILL PROGRAM

INTRODUCTION		
PHASE I **Introductory Course** (One Day)	**WATCHMAKERS** **Introduction to the Micro-Lathe Program** The student will receive an overview of the lathe program, lathe maintenance, turning theory and cutting tools.	**CLOCKMAKERS** **Introduction to the Micro-Lathe Program** The student will receive an overview of the lathe program, lathe maintenance, turning theory and cutting tools.
SKILL DEVELOPMENT COURSES		
PHASE I **Course 1** (Two Days)	**WATCHMAKERS** **Basic Lathe Operations for the Watchmaker** The student will make several small steel cutting tools and will be introduced to a variety of methods for sharpening them. These will be used to make other tools that will be used throughout the course.	**CLOCKMAKERS** **Basic Lathe Operations for the Clockmaker** The student will make several small steel cutting tools and will be introduced to a variety of methods for sharpening them. These will be used to make other items that will be used throughout the course.
Course 2 (Two Days)	**Micro-Lathe Accessories for the Watchmaker** The student will make a filing rest with a micrometer adjusting mechanism and an indexing device from pre-machined parts supplied by the instructor.	**Micro-Lathe Accessories for the Clockmaker** The student will make a filing rest with a micrometer adjusting mechanism and an indexing device from pre-machined parts supplied by the instructor.
PHASE II **Course 1** (Two Days)	**Watch Wheels and Arbors** The student will make a large watch wheel blank and mount it on an arbor using the micro-lathe. He will then make a center wheel with a setting device for an antique key wound pocket watch.	**Clock Wheels and Arbors** The student will make a clock great wheel blank and mount it on an arbor using the micro-lathe.
Course 2 (Two Days)	**Winding Arbors** The student will make a winding arbor for an antique pocket watch using the micro-lathe.	**Winding Arbors** The student will make a winding arbor for an antique clock using the micro-lathe.
PHASE III **Course 1** (Two Days)	**Turning Between Centers** The student will make a set of coned centers and a faceplate suitable for turning small work pieces.	**Turning Between Centers** The student will make a set of coned centers and a faceplate suitable for turning small work pieces and will use it to make a center wheel arbor.
Course 2 (Two Days)	**Making Spring Barrels** The student will make a spring barrel and cover with the micro-lathe.	**Making Spring Barrels** The student will make a spring barrel and cover with the micro-lathe.
PHASE IV **Course 1** (Two Days)	**Making Watch Wheels with Commercial Cutters** The student will make a large and a small watch wheel using wheel cutting equipment provided by the instructor.	**Making Clock Wheels with Commercial Cutters** The student will make a large and a small clock wheel using wheel cutting equipment provided by the instructor.
Course 2 (Two Days)	**Cutting Watch Wheels with Fly Cutters** The student will make a large and a small watch wheel using a fly cutter mounted on equipment provided by the instructor.	**Cutting Clock Wheels with Fly Cutters** The student will make a large and a small clock wheel using a fly cutter mounted on equipment provided by the instructor.
Course 3 (Two Days)	**Cutting Watch Pinions** The student will make a large pinion for a watch and the equipment to polish it with. A simple damascening exercise will be conducted in the resident course.	**Cutting Pinions** The student will make a large pinion for a clock and the equipment to polish it with. A simple damascening exercise will be conducted in the resident course.
PHASE V **Course 1** (Four Days)	**Making Cutters for Train Wheels** The student will make a set of circular cutters suitable for cutting large watch wheels. This will be accomplished using a hand-held cutting tool.	**Making Cutters for Train Wheels** The student will make a set of circular cutters suitable for cutting clock wheels. This will be accomplished using a hand-held cutting tool on the micro-lathe.
Course 2 (Two Days)	**Making Cutters for Escape Wheels** The student will make a set of specialized cutters suitable for cutting large watch escape wheels. This will be accomplished using hand-held cutting tools.	**Making Cutters for Escape Wheels** The student will make a set of specialized cutters suitable for cutting clock escape wheels. This will be accomplished using hand-held cutting tools.
MICRO-LATHE AND MICRO-MILL SPECIAL INTEREST COURSES		
SPECIAL INTEREST **Course 1** (Two Days)	**WATCHMAKERS** **Micro-Mill/Milling Spindle Operations with a Detent Index** The student will make a winding ratchet and a special set of broaches to make perfectly centered square holes.	**Micro-Mill/Milling Spindle Operations with a Detent Index** The student will make a winding ratchet and a special set of broaches to make perfectly centered square holes.
SPECIAL INTEREST **Course 2** (Two Days)	**Micro-Mill/Milling Spindle Operations with a Rotary Index** The student will make a simple rack and snail for a quarter repeater pocket watch using special equipment provided *by the instructor*.	**Micro-Mill/Milling Spindle Operations with a Rotary Index** The student will make a simple rack and snail for an antique clock using special equipment provided *by the instructor*.

ETA Courses for Watchmakers for 1997



ETA training involves practical bench work as well as lectures and demonstrations.

For over thirty years the ETA Training Centre has been organizing advanced courses principally for watchmakers and repairers. It has now published its new schedule for 1997. The various types of courses offered by ETA (see table) enable the participants to progress in stages from learning about the company's basic products to practical work on mechanical and simple quartz movements and to complicated movements. Successful participants receive bronze, silver, or gold diplomas accordingly.

The courses are given in five languages (French, German, English, Italian and Spanish) by ETA's own specialized instructors.

Course on New Products

The 1997 program has been extended to include a two-day course on ETA's latest products (A2), which will be held from the second half of 1997 on. This will enable watchmakers to familiarize themselves very quickly with ETA's latest movements, be they simple or complicated, quartz or mechanical, and to discover the secrets of their construction, how to handle them and how to repair them. This new course is bound to prove very popular among watchmakers.

Tailor-Made Courses

The ETA Training Centre is of course also able to offer tailor-made courses to meet the special requirements of groups of watchmakers or individual companies. These courses can be adapted to suit the circumstances and the needs of the client and can be held in Grenchen or elsewhere. Experience has shown that an in-depth knowledge of certain problems or specific products is often very useful.

Collaboration with Watchmaking Schools

Although ETA is very active in the field of further training for watchmakers and repairers, basic vocational training is also an important part of its program. Over 140 watchmaking schools and technical colleges all over the world traditionally enjoy ETA's support. The company also works closely with WOSTEP in Neuchâtel on their worldwide training coordination program. For many years ETA has been organizing refresher courses for instructors and supplying teaching materials and movements to schools, thus showing an active and willing interest in developing and constantly updating new teaching methods in the field of watchmaking. Watchmakers who would like to enroll for a course in 1997, or would simply like to receive more detailed information should contact ETA at ETA S.A. Fabriques d'Ebauches, Training Centre, Bahnhofstrasse 9, 2540 Grenchen, Switzerland. Organizations, societies, or companies who would like ETA to draw up a special tailor-made course should also contact the Training Centre directly.

ETA TECHNICAL TRAINING 1997

Designation	Type of course	Participants	Duration	1997 Dates	Language	Place
A1	**Basic course** (whole range of ETA quartz products, except for the chronographs)	**Watchmakers & Repairers** (who would like to learn the basic knowledge of the quartz products)	3 1/2 days	April 7-10, October 20-23	English	ETA Grenchen
A2	**Up-dating course** (on ETA new products)	**Watchmakers & Repairers** (who wish to discover the new products launched during the year)	2 days	December 4-5	English	ETA Grenchen
A3	**Specialization course** (on ETA mechanical and quartz chronographs)	**Watchmakers & Repairers** (who followed a basic course and wish a specialization course on chronographs)	3 1/2 days	as requested	English	ETA Grenchen
A5	**Individualized course** (for technical and administration personnel, organized on request)	**•Watchmaker & Repairers •Sales & Administration Personnel**	Variable (according to program)	as requested (min. number of participants for the organization of a course: 5)	as requested	as requested
A6	**"Exclusive" course** (on Elégance and mechanical and quartz calibers with perpetual calendar)	**Watchmakers & Repairers** (mastering the service of mechanical and quartz products and wishing a specialization course on "exclusive watches")	3 1/2 days	June 9-12	English	ETA Grenchen
A7	**Course on mechanical watches** (on the whole range of ETA mechanical products, without chronographs)	**Watchmakers & Repairers** (who wish to refresh their knowledge on the servicing of mechanical watches)	3 1/2 days	November 10-13	English	ETA Grenchen
D1	**Technical training seminar** (product knowledge on mechanical and quartz watches)	**Sales & Administration Personnel**	1 day	on request	English	ETA Grenchen

Enrollment, information and course programs:

ETA SA Training Centre, Bahnhofstrasse 9
CH-2540 Grenchen (tel.: 032 / 655'71'11, fax: 032 / 655'71'74)

INDUSTRY NEWS

Vibrograf U.S.A. Corp. Introduces the LC-2 Leak Controller

Mr. Joseph D. Presti, President of Vibrograf U.S.A. Corp., announced the introduction of a new dry waterproof checker, the LC-2 Leak Controller which replaces the LC-1. This self-contained instrument tests watches in sixty seconds using the vacuum test method. The LC-2 is fast, accurate and safe for all watches. The Leak Controller is perfect for the smaller shop or sales counter and is affordably priced.

For further information contact: Mr. Joseph D. Presti, President, Vibrograf U.S.A. Corp., 504 Cherry Lane, Floral Park, New York 11001-1696. Phone: (516) 437-8700. Fax: (516) 437-8708.



Baume & Mercier, Inc. Further Expands its U.S. Marketing Efforts

Baume & Mercier, Inc., the luxury Swiss watch manufacturer is pleased to announce the recent appointment of Marissa Brust to the position of Public Relations Director — U.S. Division. Ms. Brust's addition to Baume & Mercier's U.S. Division is in keeping with the firm's three-year marketing plan first initiated in 1995, and marks the firm's overall strategy to expand consumer visibility of the Baume & Mercier brand.

Ms. Brust's background encompasses extensive public relations experience in the jewelry, cosmetic and retail industries. Her experience includes a tenure with the international jeweler Tiffany & Co. where she worked in the Public Relations Division, culminating into the position of U.S. Corporate Communications Manager, responsible for the firm's U.S. trade, corporate and fragrance publicity initiatives.

Brust will report directly to Linda M. Passaro, the Vice President of Marketing, who joined the firm in May. " The combined luxury goods and marketing experience of both Brust and Passaro will further strengthen Baume & Mercier efforts in the marketplace as we continue to broaden our brand appeal to a more contemporary, affluent customer," says Steven Kaiser, President and CEO of Baume & Mercier, Inc.

Miniature Screws Self-Tapping to Speed Assembly

Standard and custom miniature self-tapping screws that speed assembly by eliminating the need for drilling and tapping holes, along with the possibility of cross-threading, are being introduced by J. I. Morris Company of Southbridge, Massachusetts.

Morris Miniature Self-Tapping Screws are made from 303 stainless steel and are available from stock in flat and flat fillister head styles in sizes from 000 to 2. Eliminating the need for drilling and tapping operations, these screws can be inserted directly into existing holes to speed assembly and are self-locking.

Ideal for manual or automated assembly, Morris Miniature Self-Tapping Screws allow designers to vary the hole size and torque requirements according to the material. These 303 stainless steel screws are available off-the-shelf in 1/8", 3/16", and 1/4" lengths and can be custom-engineered in brass, steel, and nickel-silver.

Morris Miniature Self-Tapping Screws are priced according to size, material, and quantity. Literature, price quotations, and evaluation samples are available upon request.

For more information contact: J. I. Morris Company, John B. Dirlam, Sales Manager, 394 Elm St., P.O. Box 70, Southbridge, MA 01550-0070. Phone: (800) 621-3937. Fax: (508) 764-7350.



AWI Introduces Watchmakers To Watchmaking For The Twenty-First Century

A new book and companion Project Extend course designed to prepare watchmakers to meet the challenges they will encounter in the 21st Century will be available from AWI early in 1997.

A new book *Twenty-First Century WATCHMAKING* by William O. Smith, Jr. is due off the press early in 1997. Smith has developed a method that will enable the watchmaker to successfully make many of the replacement parts required to restore fine watches in the 21st Century. Using this method and very few inexpensive tools the watchmaker will become proficient at custom making most flat metal parts required to complete a restoration.

A companion practical course has been scheduled at Project Extend for March 3-7, 1997. The course will be taught by William O. Smith, Jr. Enrollment will be limited; members are urged to contact AWI Central for a brochure so they can gain entry into the course.

William O. Smith, Jr. has spent a lifetime teaching horology. He astounded many of the "old timers" in the trade when, in 1951, as a very young man, he wrote the world's only fully illustrated Chronograph Watch Course *Ensembl-O-Graf*. In 1966, Smith joined the faculty of the University of Illinois to participate in a Micro-Precision Education Research Project. Subsequently, a program was established at Parkland College in Champaign, Illinois where Smith became Program Coordinator and taught until 1984. He has served as a technical consultant for AWI during this period.

About The Book

Watchmaking skills that were commonplace in the trade about the turn of the century virtually became obsolete with the introduction of packaged precision spare parts by both the Swiss and the American makers, as well as the Japanese in more recent times. Watchmakers seldom were required to use frazing tools, wheel stretching devices, lathes and hand tools to make a part or to alter a packaged or ebauche part to fit a particular movement. Eventually watchmaking schools eliminated much of the instruction relating to these skills, thus the term watchmaker became a misnomer and the term watch repair more correctly described those who made their living servicing timepieces.

The number of craftsmen who could consistently produce speciality replacement parts for their customers and the trade dwindled to a virtual handful. Today they are in great demand and in short supply. Many serious craftsmen are attempting to recapture these skills so they can take advantage of the current need for handmade replacement parts for some of the finest mechanical watches ever produced. As the author of the book points out, "it's a sign of the times when handmade replacement parts are as valuable as diamonds".

The purpose of this book is to cover in detail the methods the author has developed during a lifetime at the bench, methods which are the quickest, easiest and least expensive way of making high grade parts for obsolete mechanical watches. Those who become involved in the process will find it to be fascinating, enjoyable and financially rewarding.

The author's skill as a craftsman, teacher and author along with excellent photography and line drawings combine to make the development of the skills required to make these parts from raw material a challenging yet realistic goal to attain.

Using very few inexpensive tools, the reader will gain experience and confidence in making almost any flat metal part required to restore a proud antique timepiece to its original grandeur. Following the procedure in the book, the reader can routinely make clutch levers, set bridges, detents and most of the chronograph speciality parts such as a register pawl, flyback lever spring, pusher piece, etc.

Finishing of the flat steel parts is another important aspect of the part making process. The author provides complete details of the methods he personally has used along with a number of tools and tricks he has developed in his many years of experience at the bench.

Much of the instruction deals with the duplication of spare parts when all or part of a sample is available; however, the author devotes a section to the design of needed parts when the part itself is missing. This section covers all aspects of the Lever Theory, Design of Setting Springs and the Design of Minute Register Pawl. The reader who masters this section should have little difficulty in the design and duplication of any missing part. The reader will truly develop what the author refers to as "The Joy of Making Parts with Ease".

About The Course

The author, William O. Smith, Jr. will conduct a practical course at Project Extend, March 3-7, 1997. Although the skills can be mastered by carefully following the instruction in the book, there is no better way to learn than in a classroom situation with immediate feedback and the ability to ask questions. Eventually, instructional videos will be available and the course will become a regular part of the curriculum at the AWI Academy and Project Extend.

Members should contact AWI Central for a course brochure and details about obtaining a copy of the book.

GROBET USA-VIGOR

SAVE 10-15%

LIMITED TIME OFFER



POCKET CASE OPENER

Compact, adjustable wrench for waterproof cases.

CO-610 Reg. $9.25

Now Only $7.85



DOUBLE-ENDED SPRING BAR TOOL

Removes and inserts all types of spring bars.

RM-470 Reg. $9.95

Now Only $8.95



SOLID BLADE SCREWDRIVERS

Set of 9 nickel-plated with swivel heads.

SD-742 Reg. $5.50

Now Only $4.95

To order, contact your Grobet/Vigor distributor or call 800-847-4188 or 800-598-4467 for the name of the distributor nearest you.

CLASSIFIED ADVERTISING

REGULATIONS & RATES

Ads are payable in advance 75¢ per word, 80¢ per word in **bold** type. Classified display ads are $30.00 per column inch, 2-1/4" wide. Ads are not commissionable or discountable. The publisher reserves the right to edit all copy. Price lists of services will not be accepted. Confidential ads are $5.00 additional for postage and handling. The first of the month is issue date. Copy must be received 30 days in advance (e.g. February issue closes for copy on January 1st).

HOROLOGICAL TIMES
701 Enterprise Drive
Harrison, OH 45030
Phone (513) 367-9800
Fax (513) 367-1414

TRADESMAN

TIMING MACHINES -- NEW AND REFURBISHED. Quality Service and Repair. DON HOLDEN, Box 56, Penna. Furnace, PA 16865, (UPS Del. - 76866 W. Whitehall Rd.) Call (814) 692-2285.

POCKET WATCH CASE REPAIR -- Bezels, hinges, springs, dents, etc. HARRY MAZAR, Tick-Tock Specialties, 308 N. McLeansboro St., Benton, IL 62812. Phone (618) 439-6995.

DIAL REFINISHING CO. FAST SERVICE, FINEST QUALITY, quantity works welcome. Specialize on changing dial feet positions to fit the quartz movement. Send your works to: **KIRK DIAL OF SEATTLE,** 4th & Pike Bldg., Suite 625, Seattle, WA 98101; (206) 623-2452.

Larry Blanchard
Fine Watch Repair
Accutron Tuning Fork
Specializing in 214, 218, 219, and 224
Service To The Trade
117 N. Water St.
Decatur, IL 62523
(217)872-7625

ARE YOU SPENDING TOO MUCH FOR CRYSTALS?? We will make any flat mineral or heavy plastic crystal. One-day turnaround. Call or write for price list. MOVED TO LARGER QUARTERS. D & H Crystal Co., 3801 Langdale Dr., High Point, NC 27265; phone/fax (910) 889-0148.

CUTTERS cycloidal for clock wheels and pinions. Module 0.2 to 1.0. Constant profile producing traditional square bottomed teeth, 104 sizes. Escape cutters: recoil (set of seven sizes), dead beat (set of four sizes). Ratchets 60° and 70°. All cutters made in 8% cobalt M42 High Speed Steel and heat treated under vacuum. Also cutter grinding wheels, Grit and CBN. Send for Information Sheet, prices, and order forms to: P.P. Thornton (Successors), Ltd., Horological Cutter Makers, The Old Bakehouse, Upper Tysoe, Warwickshire, CV35 0TR, England; Telephone 0295-680454, Fax 0295-688176.

For professional, courteous service, contact Richard Mazza at Quality Watch Repair. 1-888-449-1125, Fax (770) 458-2920.

CLOCK, MUSIC BOX MAINSPRINGS, GEAR PINION CUTTERS, MATERIAL & PARTS CUSTOM MADE. **TANI**, Box 338, Atwater, OH 44201; (330) 947-2268. Catalog $3.00.

CHRONOMETER REPAIR & RESTORATION BY FELLOW OF THE BRITISH HOROLOGICAL INSTITUTE. All work to high standards. I am also looking to buy old chronometers, parts, boxes, etc. Phil Howard, 4220 Virginia Beach Blvd., Virginia Beach, VA 23452; (804) 481-7633, Fax (804) 481-1784.

DIAL REFINISHING



BEFORE AFTER

Quartz Conversions
Diamond Dial Conversions
Emblem & Name Personalization

Write for Brochures
INTERNATIONAL DIAL CO., INC.
58 W. SUGARTREE
P.O. BOX 970
WILMINGTON, OH 45177
(513) 382-4535

ELECTRONIC INSTRUMENT SERVICE
We are Factory Authorized Service for:
• VIBROGRAF & PORTESCAP
• TICK-O-PRINT & L&R
We service all makes of ultrasonics, all makes of watch rate recorders, and related equipment. 25 years experience.
JACK PHILLIPS
ELECTRONIC INSTRUMENT SERVICE
757 Lincoln Ave., #26 San Rafael, CA 94901
For Information
Call (415) 453-9266

Certified Master Watchmaker
Jonathan Rowe
Swiss Trained - WOSTEP
REPAIR & RESTORATION
From Antique Verge Fusee to Modern Quartz Case Repair
SPECIALIZING IN CHRONOGRAPHS
TM Services
(Time Master)
1290 Front St., Suite 125, Binghamton, NY 13901
For more info telephone (607) 775-3302

CLOCK WHEEL AND PINION CUTTING
Fast service -- Write for free Brochure and price list. Fendleys, 2535 Himes St., Irving, TX 75060. (214) 986-7698.

RESTORATION & PARTS MANUFACTURING FOR ALL TYPES OF WATCHES & CLOCKS
We restore all types of watches including tuning fork, electronic, quartz, mechanical, antique, high grade, etc. All types of clock restoration and custom watch, clock parts manufacturing including gear cutting, balance staffs all types, stems (regular and oversize), repivoting, etc. Over 35 years experience in watch, clock restoration and parts manufacturing. J.S. Park, CMW, CMEW, member AWI & NAWCC. Satisfaction guaranteed. **WATCHES UNLIMITED**, 222 Century Plaza Mall, 7500 Crestwood Blvd., Birmingham, AL 35210; Phone **1-800-352-7056** or (205) 595-2022. Hours: Mon.-Sat. 10-9; Sun. 1-6.

CLASSIFIED ADVERTISING

HAMILTON ELECTRIC WATCH REPAIR. Expert, experienced service on all Model 500 and 505 Electric watches. -- *Want to buy* Hamilton Electric parts. Also unusual Hamilton watches, Hamilton advertising and memorabilia. -- Rene Rondeau, P.O. Box 391, Corte Madera, CA 94976. (415) 924-6534, Fax (415) 924-8423.

ALVIN KRUTOLOW FOR ROLEX SERVICE
Master Watchmaker, 47 years experience. Awarded technical certificate from Rolex in 1977. Service includes case & bracelet refinishing & waterproofing of case. All watch parts are genuine Rolex. We specialize in the repair of high-grade watches & clocks. Not affiliated with Rolex Watches, Inc. USA. Ask for Alvin or Marcus, (203) 792-4539.

ATMOS BY JAEGER-LECOULTRE
Overhauled with a
three-year (3) warranty on all labor
MIKE'S CLOCK CLINIC
1326 Stanford Street
Santa Monica, CA 90404-2502
Established in 1982 & AWI Trained
I also overhaul 400-day clocks
Please Call **(310) 828-6707**
http://www.webcom.com/z4murray/

QUARTZ CONVERSIONS
WATCH RUSTED? DISCONTINUED?
NO PARTS? SENTIMENTAL? GOLD CASE?
SEND IT TO **AL ZAMORA**
FOR A NEW **SWISS** QUALITY MOVEMENT
AND FIRST QUALITY JOB CONVERSION.
90% SIZES POSSIBLE.
SAFE REGISTERED MAIL.
ZAMORA
280 PRESIDIO PLACE
BUFFALO, NY 14221-3746
(716) 633-6138
Fax (716) 633-7686

MURPHY'S CRYSTAL SERVICE
FAST -- QUALITY WORK
* **24-hour** turnaround on most jobs.
* Complete crystal fitting service for new and old wrist and pocket watches.

CALL OR WRITE FOR PRICE LIST
FAX or PHONE (209) 531-2333
1736 JOEL WAY
CERES, CA 95307

WATCH REPAIR
New & Old Movements • All Watches
Quick Turnaround • 1 Year Warranty On All Repairs
GILBERT JEWELERS & WATCH REPAIR
3655 S. Durango Dr., Unit 22, Las Vegas, NV 89117
Phone (702) 341-7293

High domed crystals for fusee watches. Must have watch or bezel. O. Frye, 2040 E. Rancho Dr., Phoenix, AZ 85016.

SHIP'S CHRONOMETERS OVERHAULED. Also keys, box hardware, etc. I buy chronometers and partial movements. **1 year guarantee on repairs. DEWEY CLARK,** (410) 592-3617.

CLOCKS: gear cutting, repivoting, jeweling, rebushing. Aircraft clocks. ROY H. NIEGEL, CMC, CMW, N31552 Saint Joe Drive, Spirit Lake, Idaho 83869-9544. SASE or CALL (208) 623-4330.

ARTICLES FOR SALE

Vibrograf B200A, $650; Tic-O-Print with Accutron and 5X, $475; Boley Lathe with Collet Tailstock, $375; Watchmaster Ultrasonic, $275; Portescap VC-10, $650; Varimatic with Ultrasonic, $450. All machines are running and in good condition. Matt (918) 664-1076.

NEW CLOCKS
Howard Miller Floor, Wall & Shelf Clocks. Best prices anywhere. A Time to Remember, 1-800-267-7756.

MINI QUARTZ MOVEMENTS. Guaranteed lowest prices--as low as $2.30. Two-year guarantee. Large selection of hands and numerals. Free delivery. SASE or call (704) 333-0221. HALL CLOCK SHOP, 1512 Central Ave., Charlotte, NC 28205.

HENRY FRIED MEMORIAL TOUR. The 24th Horological Trip to England, France and Belgium takes place in May 1997. For brochure call Nick Lerescu at 1-800-262-4284.

BE ALL THE CLOCKMAKER YOU CAN BE! Thornton Cutters in stock. KEN LAW, CMC, 2185 Eldred Rd., Chino Valley, AZ 86323.

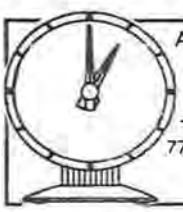
A complete selection of spare parts for the Golden Hour Clock
The Golden Hour Clock Co.
7745 East Redfield Road #500
Scottsdale, AZ 85260
602-483-3711

Black Forest Imports
YOUR RELIABLE CLOCK, MOVEMENT & PARTS SOURCE SINCE 1981
Call for **FREE** Parts Catalog
1-800-824-0900
- Largest selection of **Hermle** movements and related hard-to-find **PARTS**
- Extensive **CUCKOO** department of **movements, parts, & music boxes: Regula, H. Herr, Reuge**
- Also representing: **Bergeon, Kundo, Etsyntha, Urgos**

ROLEX STYLE
PRECISION REGULATING WRENCH
100% Money Back Guarantee If Not Fully Satisfied


Send $24.95 plus $2 Shipping and Handling to:
Michael Donnellan
P.O. Box 591543 San Francisco, CA 94159
NOT AFFILIATED WITH ROLEX USA IN ANY WAY


— Rugged — Industrial Strength —
Working Man's Watchband
This leather watchband will make your watch virtually indestructible.
Ask about Wholesale Prices
PUCK
"For that Tough Customer"
For a free Brochure, call.
800/677-0371

CASIO WATCH PARTS
No Minimum Order Required
Kaben Enterprises
3529 Chamblee Tucker Road
Atlanta, GA 30341
Official Casio Distributor
ORDERS (800) 418-2345
INFORMATION (770) 939-4511

Guaranteed Rebuilt Watch Rate Recorders
B-200A
MU-700
Vibrograf U.S.A.
Call (516) 437-8700

CLASSIFIED ADVERTISING

ARTICLES FOR SALE

HAMILTON MILITARY MATERIAL. Many parts available for 992B, 4992B, M23, M22 deck watch, M21 marine chronometer, brass hardware for boxes. Robert Ravel Co., Box 32, Devon, PA 19333. Phone (610) 644-4272.

USED WATCH MOVEMENTS. H. HERB & SON, 908 RIVA RIDGE DR., GREAT FALLS, VA 22066; Phone (703) 549-8045, Fax (703) 759-5837.

MORBIER AND OTHER EUROPEAN CLOCKS AND OVAL DOMES
For Sale, Also Parts & Cases
THEO BURGER
3335 Birch St., Palo Alto, CA 94306
Phone/Fax (415) 917-8775

Watchmakers tools, equipment, material, and supplies, mostly used. Sold by free list, available from Dashto, Tom Mister, 2557 Sandpiper Rd., Virginia Beach, VA 23456; Phone (804) 426-1155, Fax (804) 426-3133.

USED WATCH MOVEMENTS. "Don" 4325 N. 5th St., Fresno, CA 93726; (209) 229-8423.



HELP WANTED

SWISS WATCH GROUP
representing several
reputable well-established watch brands
is looking for qualified watchmakers
to set up Service Centers in
Florida (Miami) and Texas (Dallas or Houston)
Joint ventures a possibility.
Please send confidential resume to:
Box HW1296
c/o Horological Times
701 Enterprise Drive
Harrison, OH 45030

Active Portland, Oregon AGS Guild Store seeking professional CMW to maintain complete watch service department. Health, life, disability, pension. Relocation assist. William Bevill (503) 644-1333.

Clock repair person wanted to join growing downtown business in Big Sky Country. Quality working conditions, beautiful surroundings and friendly university town. Applicants should have shop experience and/or formal technical education servicing new and antique clocks. Salary negotiable/commensurate with ability and quality of work (not quantity). Send resume to: D. Berghold, 113 East Main St., Bozeman, MT 59715.

High volume watch service facility seeks full-time watchmaker. Excellent working atmosphere, superior facility and support. Located in Central Illinois. All levels of expertise considered. Call Parsec Enterprises 1-800-359-2508, Fax (309) 689-6543.

WANTED: Clock repair person with experience in all types of clock repairs. In fast growing area of North Carolina where golf is plentiful. Send resume to: Time Out Watch & Clock Shop, 106 W. Main St., Aberdeen, NC 28315 or Fax (910) 944-9529.

WATCHMAKERS
Universal Geneve Service Center
Top Salary & Benefits
Southfield, MI
(810) 358-9084

LIVE & WORK IN PARADISE
POSITION OPEN for Skilled Clock Restorer in California's Premiere Horology Centre. Mail resume to: **HRS. ANTIQUE CLOCKS,** 486 First Street, Solvang, CA 93463. Phone (805) 688-6222, Fax (805) 686-4044. Also wanted:Watchmaker, Music Box Restorer.

WANTED TO BUY

Tired of fixing one watch a month? Got a basement full of stuff you'll never use again? I'll buy your old movements, cases, dials, crystals, etc. I'll even pay the shipping costs or travel to you. Call Mike Bailey at (847) 741-1289 or write P.O. Box 531, Elgin, IL 60121.

ANYTHING ILLINOIS
Want to buy Illinois wristwatches, dials, movements and cases (complete or parts) in any condition for avid private collector. Please call 800-421-1968, x5520, Fax 714-725-9787 or mail to Fred Friedberg, c/o TAMS, P.O. Box 2068, Tustin, CA 92681-2068.

WANTED: Paying high prices for chronograph and high grade watches, movements, dials, cases, & parts. Dean Sarnelle, 25 W. Beverley St., Staunton, VA 24401, phone & fax (540) 885-6064.

WANTED
- Watches: Rolex, Patek Philippe, Audemars Piguet, Vacheron, LeCoultre, IWC, Etc. Also Buying Low Grades--Gold-Filled & Gold (Hamilton, Bulova, Elgin, Gruen, Etc.)
- Sterling & Plated Trays, Dishes, Service Sets, Etc.
- Scrap--Gold-Filled, Gold, Silver, Platinum, Watch Batteries (Silver or Mixed)

CALL TOLL FREE **1-800-426-2344**


Ron Fried, President

SPECIALTY METALS REFINING COMPANY
10 Bay Street
Westport, CT 06880

Members: Better Business Bureau
Jewelers Board of Trade
Our 140th Consecutive Ad

WANTED
GOLD FILLED SCRAP
SILVER, GOLD, PLATINUM

WORN OR BROKEN

WRIST & POCKET WATCH CASES
• WATCH BANDS (GF & GP) • CHAINS •
LOCKETS • BRACELETS • EYEGLASSES

NO ASSAY or REFINING COST
NO MINIMUM AMOUNT
DAILY QUOTES – FAST PAYMENT
RECENT PRICES

WATCHBANDS	$12/LB.
1/20 12K G.F.	$77/LB.
20 YR. P.W. CASES	$100/LB.

GF SPECIALITIES, LTD.
P.O. Box 17216 • Milwaukee, WI 53217
1-800-351-6926 • IRV BARD
Mon - Fri 10 - 4 Central Time
– 30 Years of Experience –

CLASSIFIED ADVERTISING

WATCH MATERIAL DISTRIBUTORS
Please call us if you are interested
in selling your business.
All replies confidential.
Contact Pat Cassedy
Cas-Ker Co. (513) 241-7073

We pay 97% of market for karat gold scrap (any amount)! Also, buy filings, gold fill, sweeps, silver, platinum! Immediate 24-hour payment return mail! Ship insured/registered mail to: AMERICAN METALS COMPANY, 253 King St., Dept. HT, Charleston, SC 29401. Established 1960. Phone (803) 722-2073.

WANTED: Rolex Jubilee Band, 14K & Stainless, 3/4 size case. (513) 521-2121.

TOP BUYERS OF WATCHMAKERS TOOLS, MATERIALS, EQUIPMENT, ETC. We travel for prompt settlement. Retirements and estate specialists. Please call Tom Mister at (804) 426-1155 or (804) 426-3133 .

Watches Wanted



We desperately need our retail customers' fine watches by:

Rolex, Patek Philippe, Audemars Piguet, Vacheron & Constantin, Movado, Gubelin, etc.

We are paying top prices for any high quality, unusual or complicated Wrist or Pocket Watches

When You're Ready to Sell a Fine Watch
Call Us Toll Free 1-800-842-8625
In Texas 1-214-902-0664

Always prompt immediate payment!

Wingate's Quality Watches
P.O. Box 59760 • Dallas, TX 75229-1760



AWI BOOKSTORE



GRUEN WATCHES: A SPECIAL COLLECTION - Robert D. Gruen. A collection of Gruen watches with photos and descriptions. **$6.95**

HOW TO BUILD A REGULATOR CLOCK - J.M. Huckabee. Shop drawings with critical drawing notes, 82 fully illustrated pages. **$18.00**

MILITARY TIMEPIECES - Marvin E. Whitney. Probably the most complete compilation on military timepieces to date. **$75.00**

THE MUSEUM OF THE AMERICAN WATCHMAKERS INSTITUTE - Henry B. Fried. This book is an exposé of the unique collection of the American Watchmakers Institute. It features more than 250 photos including 60 full color prints of the James Ward Packard Collection. **$125.00**

QUESTIONS & ANSWERS IN QUARTZ WATCH REPAIRING - Alice B. Carpenter and Buddy Carpenter. A basic understanding of quartz technology. **$12.95**

QUESTIONS & ANSWERS OF AND FOR THE CLOCKMAKING PROFESSION - AWI. Experts answer everyday questions about clockmaking. **$14.95**

REPAIRING QUARTZ WATCHES - Henry B. Fried. Includes a basic course in electricity & electronic horology. **$26.00**

THE SHIP'S CHRONOMETER - Marvin E. Whitney. A concise treatise on the fascinating nautical timepiece, for the collector as well as the horologist. **$75.00**

STRIKING CLOCKS - Joseph G. Baier. A hands-on survey for the clockmaker. **$7.95**

TIMING MANIPULATIONS - James L. Hamilton. 63 pages plus three large charts for the serious student of timing mechanical watches. **$4.50**

THE TOP 300 TRADE SECRETS OF A MASTER CLOCKMAKER - J.M. Huckabee. This 111-page book covers essentially all of the more difficult tasks encountered in the restoration of older American clocks. **$26.95**

WATCH & CLOCK INFORMATION, PLEASE - W.H. Samelius. The writing of Samelius edited by O.R. Hagans. **$30.00**

THE WATCH REPAIRER'S MANUAL - Henry B. Fried. The newly expanded and updated fourth edition of this popular textbook on watch repair. **$35.00**

If you are interested in any of the above books, please send your order along with payment to: AWI Central, 701 Enterprise Dr., Harrison, OH 45030; Phone (513) 367-9800; Fax (513) 367-1414. Payment can be made by check, money order, Mastercard or Visa. When using a credit card please include your credit card number, expiration date and signature .

Continued from page 4.

researches in such mainsprings. They found out that by pre-stressing steel mainsprings too, these steel springs would not break as often (at least) as they did earlier.

The alloy springs they developed were indeed superior in that no microscopic rust spots could invade the steel. The alloy springs were, of course, pre-stressed and that provided a bit of great tension than unstressed steel springs. Thus your experience. To supply a ready formula on how much stronger each type or percentage stronger the alloy springs were in comparison to the resident steel spring has never been made to satisfaction. Each situation would have to be treated as an individual experience.

Henry B. Fried, 1995

QUESTION

I have a Swiss pocket watch about 19 ligne, with an 18-karat hunting case with double back. The case number is 25355 and the case inner back lid is autographed Chas. E. Jacot. The movement is also autographed the same as the case in beautiful script.

There are 15 friction-set jewels, a center pinion, and it seems to be like a Patek Philippe, but it lacks the extra fineries of a Patek Philippe.

It has an enamel dial with Roman numerals; there is no name on the dial.

C. C., El Centro, California

ANSWER

The watch you describe as a Chas. E. Jacot must surely be the famous Chas. E. Jacot of LeLocle, Switzerland. He is credited with the invention of the "Chinese" duplex escapement, the type that has its second-hand jump in full seconds. The escape wheel of this escapement looks just like a crab-claw.

Henry B. Fried

QUESTION

After cleaning a cuckoo clock, I hear a whistle as the pendulum swings. The whistle is noticed on one direction most of the time. I know it's coming from the pendulum hanger area. I have tried all kinds of adjustments, lubed the area, etc. It is very hard to get it to stop.

Can you advise me what to do to get it to stop?

Loren Guth, Oil City, Pennsylvania

ANSWER

The whistle or squeak you refer to usually does not come from the pendulum hanger. Most of the time there is a pallet on the entrance side that's worn a groove and will squeak. You may try to oil the escape wheel, like a watch, every 6-8 teeth. Use pallet stone oil only. If oil fails, then you need to polish the pallets or replace them. If I can be of more help please call me or write.

James Williams,
AWI Cuckoo Clock Instructor

QUESTION

Please explain how diver's watches are marked in the United States.

Manfred Guntsch, Pforzheim, Germany

ANSWER

As a Past Director of the American Watchmakers-Clockmakers Institute, and having specialized in the servicing of professional diver's watches for over thirty-five years, your letter of July 10 has been forwarded to me for reply.

We use A.T.M. (Atmospheres....1 atmosphere being approximately 33 feet). This marking is usually on the caseback or on the dial of professional diver's watches.

Standard watches are often not marked at all, thus it is necessary to rely on written information provided with the watch at time of purchase. Unfortunately, I have found that many people in this country are still under the impression that their watches are "waterproof" when they are not.

Jay M. Foreman (FBHI),
Cambria, California

ADVERTISING INDEX

Borel & Co., Jules 5

Butterworth Clocks, Inc. 20

Cas-Ker Co. ..... inside back cover

Cowells, USA 45

Esslinger & Co. ... inside front cover

Grobet USA-Vigor 51

Historic Timekeepers 20

S. LaRose, Inc. 17

Livesay's, Inc. 25

Maxell Corp. of America 7

McCaw Company, William S. 3

Newall Manufacturing, Inc. 43

Renata U.S. 9

Smith Supply House 31

Twin City Supply 29

Vibrograf U.S.A. Corp. 15

Witschi Electronics USA Ltd. 27

Zantech Inc. 13

Now you can renew watch crystals quickly, easily!



For Plastic And Glass

Renew watch crystals in minutes without removing from the watch with our crystal scratch repair kit. Use your flex-shaft or motor tool to hold the 1/8" shanks. Kit comes complete with easy to follow instructions and includes:

- Polishing Compound for plastic crystals.
- Polishing Compound for glass crystals.
- Felt Pad for plastic, Felt Bob for glass.
- 1/8" Mandrel for discs with velcro mounting.
- 8 Abrasive Discs in assorted grits; 2400, 3600, 4000, and 6000.
- In sturdy plastic compartment box.

$24.95

170.920 Crystal Repair Kit .....
470.220 Glass Polishing Compound $5.50

Six Piece Screwdriver Set FREE with any $15 order!

Six solid blade screwdrivers are ideal for many tasks in your shop; jewelry, clocks, cameras and office machines.
520.513 Jeweler's Screwdriver Set..... **$6.95**



$6.95 Value. Yours FREE on request with any order of $15 or more. While supply lasts.

Offer expires 11/30/96

100% SATISFACTION GUARANTEED

You can buy from Cas-Ker with confidence, knowing that if you are not satisfied with your order when it arrives, you may return it for a prompt exchange or refund.

UPS NEXT DAY AIR
MOST AREAS IN THE CONTINENTAL U.S.
PAD PAK 1 to 2 lbs **$7.25**
EXTREMELY URGENT

Cas-Ker Co.

2121 SPRING GROVE AVE
PO BOX 14069
CINCINNATI OH 45250-0069

NEXT DAY LETTER PAK 15OZ OR LESS
10:30AM DELIVERY GUARANTEED $9.75
MOST AREAS IN THE CONTINENTAL U.S.

CALL TODAY 1•800•487•0408

FAX 1-800-487-5848 CINCINNATI CALL 513/241-7073 FAX 513-241-5848

VISA MasterCard

1997 Bench Courses

To register for these courses, please send your Bench Course registration and fee to: **AWI Central, 701 Enterprise Drive, Harrison, OH 45030.** PLEASE NOTE: Registrations are limited and will be selected by the earliest postmarks. You may register by fax if you wish; if so, please include your Visa or Mastercard number, card expiration date, signature, and phone number. Registrations cannot be taken by phone. All registration fee checks and charges are processed immediately upon receipt. Registration deadline is 30 days prior to class. **FAX (513) 367-1414 • PHONE (513) 367-9800**
* Indicates Bench Courses held in conjunction with a convention.

DATE	CLASS INSTRUCTOR	LOCATION FEE
FEBRUARY 1997		
1-2	Introduction to American Pocket Watches Alice B. Carpenter	Orange County, CA $100.00
14-17	Phase IV - Wheel Cutting Operations for the Clockmaker - Roy Hovey	Charlotte, NC $380.00
23	Servicing the ETA Quartz Chronograph Jeff Broughton	Orlando, FL $50.00
28-March 2	Advanced Clock Repair Ron Iverson	Sacramento, CA $150.00
MARCH 1997		
8-9	Introduction to Quartz Watch Repair Buddy Carpenter	San Diego, CA $100.00
8-9	Modern Mechanical Chronograph Tamara Houk	Arlington, TX $100.00
14-16	Repair of the Bulova Accutron Henry Frystak	Cleveland, OH $150.00
15-16	Repair of the Atmos Clock Gerald G. Jaeger	Philadelphia, PA $100.00
APRIL 1997		
5-6	Hairspring Vibrating Joseph L. Cerullo	Orlando, FL $100.00
19-20	Modern Mechanical Chronograph Tamara Houk	Philadelphia, PA $100.00
26	Quartz Perpetual Calendar Remy Waelchli	Seattle, WA $50.00
26-27	Introduction to Clock Repair Buddy Carpenter	San Diego, CA $100.00
27	Quartz Perpetual Calendar Remy Waelchli	Portland, OR $50.00
MAY 1997		
2-4	Advanced Clock Repair Ron Iverson	Columbus, OH $150.00
3-4	Repair of the Atmos Clock Gerald G. Jaeger	Alexandria, VA $100.00
17-18	Mechanical Chronographs Mark Heist	Arlington, TX $100.00
JUNE 1997		
6-8	Repair of the Bulova Accutron Henry Frystak	Tucson, AZ $150.00



Happy Holidays

1997 Project Extend

AWI's continuing Education Program offers one-week and two-week classes in various phases of watch & clock repair techniques. Work alongside recognized leaders in the field of horology. See how they handle the everyday situations we all encounter. All Project Extend classes are held in AWI's training rooms in Harrison, Ohio. Call or write for information and details for the classes that interest you! Registration deadline is 30 days prior to class. **AWI Central, 701 Enterprise Dr., Harrison, OH 45030; Phone (513) 367-9800, Fax (513) 367-1414**

PROJECT EXTEND CLOCK CLASSES

DATE	CLASS INSTRUCTOR	FEE
FEBRUARY 1997		
10-14	Introduction to Clock Repair Jim LaChapelle	$250.00
24-28	Chiming & Striking Clocks Buddy Carpenter	$250.00
MARCH 1997		
10-14	Clock Case Repair James E. Williams	$250.00
17-21	Clock Escapements Jerry Faier	$250.00
APRIL 1997		
6-9	Repair of the Ship's Chronometers Dewey Clark	$200.00
14-18	French Clock Repair Ron Iverson	$250.00
21-25	Clock Restoration David Christianson	$250.00
28-May 2	Organize Your Work Habits for Success Robert Ockenden	$250.00

PROJECT EXTEND WATCH CLASSES

DATE	CLASS INSTRUCTOR	FEE
JANUARY 1997		
20-24	Hairspring Vibrating & Timing Adjustments James Lubic	$250.00
FEBRUARY 1997		
10-14	American Pocket Watches Alice Carpenter	$250.00
24-28	Automatic Winding Mechanisms James Lubic	$250.00
MARCH 1997		
3-7	21st Century Watchmaking - The Joy of Making Parts With Ease, William O. Smith, Jr.	$250.00
17-21	Mechanical Chronograph Watches Bernhard Stoeber	$250.00
APRIL 1997		
7-11	Basic Electronics & Meter Reading Gerald Jaeger	$250.00
21-24	Repair of ETA Quartz Products Remy Waelchli	$200.00
28-May 2	Advanced Quartz Watch Repair Robert Bishop	$250.00
MAY 1997		
5-9	Repair of the Bulova Accutron Henry Frystak	$262.00
12-16	Shop Management Fred S. Burckhardt	$250.00
19-23	Advanced Lathe & Swiss Turns Ron DeCorte	$250.00
JUNE 1997		
9-13	CMW & CMEW Exams James Lubic	$250.00 + Exam Fee