HOROLOGICAL™ TIMES

February 2006



American Watchmakers-Clockmakers Institute

NEW

Jr. Master O-Ring Waterproof Crown Kit

#83.001

This new assortment of waterproof crowns makes it easy to stock a variety of crown sizes – 3.0, 3.5, 4.0, 4.5, 5.0, and 5.5mm – in assorted tube openings (1.60 - 2.50mm) and tap sizes (10, 11, 12). There are 24 sizes in the assortment; it is available in yellow, white, or mixed. Can also be made in 48 or 72 piece quantity.



24-Piece Kit	48-Piece Kit	72-Piece Kit
Yellow or White	Yellow, White or mixed	Yellow, White or mixed
$26.95	$46.95	$59.00

Pocket Watch Crown Kit



Plastic compartment box contains 12 different sizes of popular type crowns. In yellow or white; refills available.

#83.206 (Yellow) $22.95

#83.209 (White) $19.95

Crown Cutters

#64.086 $32.50



Used to enlarge the opening on watch crowns. Set includes 3 sizes: 2mm, 4mm & 6mm.

"8 in One" Spring Bar Assortment



Includes 8 types – 36 sizes. A total of 1200 pieces!

We've combined the best selling sizes and types of spring bars in a sturdy 36 compartment box.

#82.2014 $48

Contains these popular styles:

- **Double Shoulder – Regular, Thin, Stainless Steel**
- **Double Flange (Stainless) – 1.3mm, 1.5mm, 1.8mm**
- **Buckle Type (Stainless) – 6 sizes, Short End**

Esslinger & Co.
1165 Medallion Drive • Saint Paul, MN 55120
Serving the Trade Since 1923

national phone orders: 1-800-328-0205
local phone orders: 651-452-7180

fax orders (24 hrs): 1-800-548-9304
local fax: 651-452-4298

HOROLOGICAL™ TIMES

Official Publication of the
American Watchmakers-Clockmakers Institute

EDITORIAL & EXECUTIVE OFFICES
American Watchmakers-Clockmakers Institute (AWCI)
701 Enterprise Drive, Harrison, OH 45030
Phone: Toll Free 1-866-367-2924 or (513) 367-9800
Fax: (513) 367-1414
E-mail: awci@awci.com
Website: www.awci.com
Office Hours: Monday-Friday 8:00 AM to 5:00 PM (EST)
Closed National Holidays

Donna K. Baas: Managing Editor, Advertising Manager
Katherine J. Ortt: Associate Editor, Layout/Design Associate

James E. Lubic, CMW: Executive Director
Education & Technical Director
Lucy Fuleki: Assistant Executive Director
Thomas J. Pack, CPA: Finance Director
Laurie Penman: Clock Instructor
Manuel Yazijian, CMW: Watchmaking Instructor
Certification Coordinator
Nancy L. Wellmann: Education Coordinator
Sharon McManus: Membership Coordinator
Mary Huff: Shipping Coordinator
Heather Weaver: Receptionist/Secretary
Jim Meyer: IT Director

HOROLOGICAL TIMES ADVISORY COMMITTEE
Ron Iverson, CMC: Chairman
Brien Dews, CC
Matt Henning, CW
Chip Lim, CMW, CMC, CMEW
Robert D. Porter, CMW
E-mail: htcomm@awci.com

AWCI OFFICERS
Jim Door: President
Mark Butterworth: 1st Vice President
Dennis Warner, CW: 2nd Vice President
Alice B. Carpenter, CMW, CMEW, FAWI: Secretary
James K. Zimmerman, CMW, CMC, CMEW: Treasurer

AWCI DIRECTORS
Mark Baker, CMW
Gene Bertram, CC
Matt Henning, CW
Roland (Ron) Iverson, CMC
Gerald Kincaid: Affiliate Chapter Director
Doug Thompson, CW, CEWT: Research & Education
Council Director
Willem Van Kempen: Industry Advisory Board Director

IMMEDIATE PAST PRESIDENT
Jack Kurdzionak, CW

FELLOW-American Watchmakers-Clockmakers Institute

Robert F. Bishop	*Harold J. Herman
James H. Broughton	J.M. Huckabee
Fred S. Burckhardt	Gerald G. Jaeger
Alice B. Carpenter	Benjamin Matz
David A. Christianson	Robert A. Nelson
George Daniels	*Hamilton E. Pease
Wes Door	Archie B. Perkins
*Henry B. Fried	William O. Smith, Jr.
Josephine F. Hagans	Milton C. Stevens
*Orville R. Hagans	*Marvin E. Whitney
Ewell D. Hartman	

*Deceased

Reprinting and reproduction is prohibited without written permission from the American Watchmakers-Clockmakers Institute. Copyright ©2006 by the American Watchmakers-Clockmakers Institute.

HOROLOGICAL TIMES (ISSN# 145-9546) is published monthly and copyrighted by the American Watchmakers-Clockmakers Institute, 701 Enterprise Drive, Harrison, OH 45030-1696. Subscription price for the public is $79.00 per year ($6.50 per copy). Members subscription is $35.00 which is included with annual dues of $79.00. Periodicals postage paid at Harrison, OH 45030 and additional entries. POSTMASTER: Send address changes to *HOROLOGICAL TIMES*, 701 Enterprise Drive, Harrison, OH

HOROLOGICAL™ TIMES

VOLUME 30, NUMBER 2, FEBRUARY 2006

FEATURE ARTICLES

10 **Paul Gerber's Retro Twin**, By Curtis D. Thomson
20 **North Seattle Community College**, By Chip Lim
Open House 2005
24 **Business Basics**, Part 2, By Dr. Paul Stairs
28 **Certification Central**, By Vince Schrader
ANSI Standards: on the Horizon?

COLUMNS

6 **The Modern German Clock Movement**, By Mark Butterworth
Part 60, Moving Day—Both In and Out
40 **Correction to Adjusting Mass-Produced Pallets**,
By Laurie Penman
44 **The Deadbeat Escapement**, By Laurie Penman
Part 3, Finishing Pallets by Lathe

DEPARTMENTS

2 **President's Message**, By Jim Door
2 **Executive Director's Message**, By James E. Lubic
4 **Questions & Answers**, By David A. Christianson
36 **From the Workshop**, By Jack Kurdzionak
39 **AWCI Material Search**
49 **AWCI New Members**
50 **Bulletin Board**
52 **Classified Advertising**
56 **Advertisers' Index**
56 **AWCI Employee Directory**

EDUCATION

32 **AWCI Academy Watchmaking Classes**
32 **AWCI Certification Exam Schedule**
33 **AWCI 21st Century Certified Watchmakers**
34 **2006 ETA SA Training Courses**
34 **ETA Combination Course**
Basic Quartz & Mechanical Automatic Chronograph Watch Repair
48 **AWCI Evening Classes in Watch and Clock Repair**
55 **AWCI Home Study Course in Watch & Clock Repair**

SPECIAL INTEREST

43 **2006 AWCI Annual Convention & Educational Symposium**

COVER

This month's cover features
Paul Gerber's Retro Twin



President's Message

Jim Door

Here we are in February, barely into the New Year and chances are many have already broken their New Year's resolutions. Losing weight and/or getting fit is at the top of most people's lists.

Not long ago I read an article that gave suggestions on how to lose weight by making minor adjustments to the way we do things. An example was standing on one foot while brushing your teeth. Halfway through switch which foot you are standing on. This is supposed to burn up 5-10 extra calories.

This made me wonder; how can we burn extra calories in our everyday work? Here are a few ideas that are easy to implement. Instead of conveniently placing your tools on the workbench, spread them around the shop, thus requiring extra effort. When a part falls on the floor take the opportunity to do 5 pushups while looking for the part.

Seriously, one advantage we have over some occupations is that our work keeps our minds active. Each item brought in has its own secrets and problems that must be deduced and then fixed. It is easy however to overlook our physical well-being. At times we use hazardous chemicals, we breathe in metal dust while working at the lathe and much work is done while being seated. Let us not overlook our health. Consider wearing a mask while working with chemicals or doing lathe work and add physical activities before or after work.

We spend our days putting watches and clocks into better health. Don't we deserve the same consideration? I am resolved to become more proactive on this subject this year. Please won't you join me?



Executive Director's Message

James E. Lubic, CMW

By the time you receive this issue of the *Horological Times* the 2006 Mid-year Executive Committee Meeting will have already taken place. The dates for this year's meeting are February 10th & 11th. We are looking forward to the finalized version of the Standards and Practices for Clockmaker Certification, and setting up a schedule of pilot exams.

The Trustees of the Education, Library and Museum (ELM) Charitable Trust will be meeting February 11th and 12th. This is when the Trustees have an opportunity to get caught up on logging in donations and changing a display or two in the museum. By the way, the Trust would like to thank all of you who generously donated to the Trust this year. So far the total cash donations for fiscal year 05-06 are just over $5300.

This year also marks the first meeting of the AWCI Board of Examiners (BOE). This meeting will take place Thursday, February 9th. The purpose of this meeting is to review certification policies and procedures. If there is any tweaking to the certification that needs to be done, proposals will be made to the Board of Directors for consideration.

The Industry Advisory Board (IAB) will meet on February 9th also. This is the first time that I can remember the IAB meeting at any other time than the annual meeting in August. Last summer in Minnesota we had 22 participants in the IAB meeting and we are hoping to have even more participating in this meeting.

We just received confirmation that Alessandro Betti of ETA in Grenchen, Switzerland will be conducting a course here in Harrison, OH, March 27th – 31st. The course will be a combination of a Basic Quartz Repair and Mechanical Chronograph Series 7750. Contact Manuel Yazijian at 866-367-2924, ext. 309 for details.

Our website at www.awci.com has grown into a fairly large site with a lot of information. Some of it seems to be hidden within and difficult to find. For this reason a "Search" feature has been added. This will make it faster and easier to find information or specific items that are available on our website. You will still be able to browse information by clicking through the various drop-down menus if you prefer. While I'm on the subject of our website...be sure to keep your contact information current on the AWCI Referral Directory. This is one way that the cyber world can find you. This is a totally volunteer program. If you haven't gone to the website to "log on" to the member protected area and turned your record on, chances are it has never been turned on. This is very simple to do. Go to the AWCI Home Page at www.awci.com, click "log in" and follow the directions. Remember, your password is your member number plus the first initial of your last name capitalized.

HEY! You Simply Can't Pass Up Savings Like This!



ETA 280.002
Reg. $25.95
SALE $22.95



ETA 901.005
Reg. $8.95
SALE $7.50



ETA F03.11a/3
Reg. $11.95
SALE $9.95



ETA F05.11a/3
Reg. $11.95
SALE $9.95

Save Up to 50% - Ask for Our Current Movement Book!
These Prices Good through February 28, 2006!



ETA F06.11a/3
Reg. $11.95
SALE $9.95



FE 5120
Reg. $9.95
SALE $6.95



HAT VX10
Reg. $7.95
SALE $5.95



HAT VX32/3
Reg. $9.95
SALE $5.95

Buy 5 or More Movements and Save 10% Anytime!
Excludes the Movements in This Sale!



HAT Y121
Reg. $4.95
SALE $2.95



RONDA 751
Reg. $7.95
SALE $5.95



RONDA 751E
Reg. $14.95
SALE $11.95



MIYOTA 6M12/3
Reg. $9.95
SALE $4.95

The Wm. S. McCaw Company

The Watchmaker's Material House Since 1913!

1722 Madison Avenue Toledo, Ohio 43624
419-243-3720 800-537-0343 800-472-0200
Fax: 419-243-0321 800-245-6481
mccawco@sbcglobal.net



David Christianson, CMW, FAWI

Questions & Answers

Question

Can you give me any information (i.e., age, origin, maker, etc.)on the watch shown in these photographs?

Michael Sater
Bloomington, Indiana

Answer

Your key wind/key set cylinder escapement watch is suspended from a Victorian-era chatelaine. The chatelaine was both a decorative and utilitarian piece of woman's jewelry. Originally a chatelaine was a decorative clasp or brooch that had many chains hanging from it. From these chains various necessary accessories were hung such as thimbles, keys, seals, whistles, scissors and/or watches. The earliest chatelaines (in the later Georgian periods) were worn at the belt line. Early Victorian-era chatelaines were more delicate in design and were worn at the belt line or pinned to the shirtwaist. By the mid-Victorian period (1860-85) they became bolder in design and were usually reserved for a watch and its winding and setting keys, such as yours; and would have been worn from the lapel of a dress coat.

The watch movement, itself, is of the Lepine caliber bar movement style; a style that the

(Continued on page 9.)







Borel

Treat yourself to a new Bench in 2006

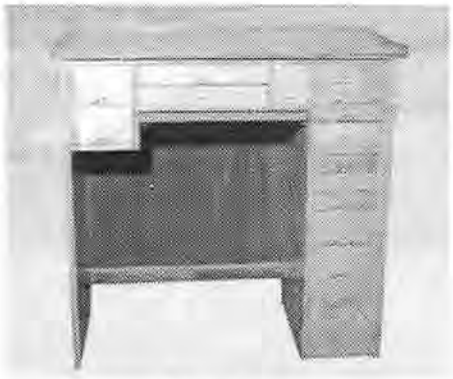

Standard

Beautiful wood workbench features 15 drawers of various sizes and a canvas catch tray. A safety groove across front of top and a lip on the three sides prevents parts and tools from rolling off. Shipped in two cartons via freight collect, 126 lbs., 39 W x 20½ D x 39" H.

BN225 $489.00



Custom

This fine piece of furniture will reflect your professional abilities. Features 10 drawers and a cloth catch tray. Maple or Oak with 2" butcher block tops. Straight front or with armrests designed to reduce stress and help you work more efficiently. 175-250 lbs., 48&62 W x 26 D x 38&40" H.

One bank of drawers $1100 - 1500

Dual bank of drawers $1725 - 1870



Deluxe European Ergonomic

You work at your bench for many years, don't you and your body deserve the best. These bench are used by Swatch and are ergonomically designed to reduce strain. The height adjusts 10" and armrest tilt is adjustable. Special mount for air & vacuum and vice. A Shelf unit on top not shown. 220-400+ lbs., 49&57 W x 26 D x 37-47" H.

Various models $3000 - 5000

For full information on our Watchmaker Benches ask for brochure, DOC-WBench

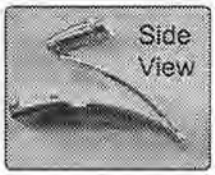

Push Button Trifold Clasps



These nicely made stainless steel clasps are easily opened by pushing in the side buttons. Fastens securely when buttons are released when closing. Asst. contains 1 each - 12, 14, 16, 18, 20mm sizes.

18A-280 5 pc. White asst. **$ 11.50**

18A-281 10 pc. Y & W asst **$ 26.75**



Pushbutton Trifolds w/ security lock



Stainless steel trifold watchband clasps with security lock are available in a push-button-style in 12, 14, 16, 18, 20, and 22mm sizes. Easy to use *and* with added security. St. steel only. 2 of each size.

18A-360 12 pc. asst. **$ 23.75**

Tapered Pushbutton Butterfly Buckles



Also regular butterfly type

18 different butterfly buckles all in one handy assortment. Fine quality polished all stainless steel butterfly buckles in assorted sizes and styles. Includes 6 tapered pushbutton styles. Refills range from $ 4.50 to $ 7.95

18A-260 18 pc. asst. **$ 95.00**

Borel

Jules Borel & Co.
1110 Grand Boulevard
Kansas City, MO 64106-2348

Order Desk **800-776-6858**
Order FAX **800-776-6862**
Local **816-421-6110**

Peace On Earth



Mark Butterworth

The Modern German Clock Movement

Moving Day—Both In and Out

Part 60

With the prevalence of the modern German clock, the grandfather clock in particular, comes an increasing number of job opportunities for clocks to be packed for moving and also clocks to be unpacked after moving. I had the pleasure of doing this three times for the same customer. It turns out we have a Monsanto plant in Muscatine, which has their headquarters in St. Louis, and plants around the world. A client got a promotion to HQ in St. Louis so I packed the clock. A few years later he got promoted to a higher position in Muscatine—unpacking the clock. He got further promoted to the plant in New Orleans and after that came back as plant manager.

I am the first to say that properly packing and unpacking is not rocket science and most of this is old news for a lot of people. However, in my position as a distributor I do hear the horror stories of things that go wrong and sooner or later, what can go wrong, does.

Some shops are also retailers and as a result have access to original weight cartons, pendulum boxes, etc. Most are not so fortunate. The following is a series of tips of which hopefully, at least one is helpful.

In regards to packing the clock:
1. Observe whether the clock is running or not when entering the home. Also check for dings, dents, and other forms of damage. Test to see if it is chiming and striking correctly. It should be noted on the slip, especially if it is not running regardless of the reason. The purpose of this is to minimize liability in the event the client gets to the destination and makes the claim that the clock was running before the move and now is not running either due to improper packing or shipping. The client usually tries to come back against the moving company since in the mind of the client, they charge outrageous fees and the client is entitled to something. The moving company will surely contact you and it is beneficial to be prepared.

2. If it is chain driven, remove the weights and run a wire through the chains directly under the seaboard to minimize the chance of coming off the sprockets. Wrap each weight carefully and mark for L, C, and R. Use a lot of protective wrap and also a sturdy box. Count on them being dropped.

3. If it is cable driven, wind the weights to the top while inserting a piece of soft styro with a slit to draw the pulley into the slot. That will keep tension on the cable and hopefully reduce the chance of it coming off the drum or overlapping.

4. Remove the weights and pack and mark as in #2.

5. Remove the pendulum. Unless the customer or you have a pendulum box, I suggest wrapping it in paper and placing inside the clock case. I do not usually tape them to the back as the wood finish can come off with the tape. If the back is a mirror, tape it. The reason for storing inside the case is that often pendulums get bent up being shipped separately.

Livesay's Inc.

Tampa, Florida

Wholesale Jeweler & Watchmaker Supplies Since 1969

Phone Orders

(800) 476-2715

Toll Free 24 Hour FAX Orders

(800) 476-8016

Tampa (813)229-2715 Local Fax (813)221-8016

Email info@LivesaysInc.com

Your Headquarters For Batteries, Watch Material, Tools, Findings, Bands, Jewelry Boxes, Casting Supplies, Watch Movements, and Much, Much More. Catalogs Available.

Horotec Screwdriver Set



This is a high quality screwdriver set of six by with color coded heads. Sizes include 0.60, 0.80, 1.00, 1.20, 1.40 and 2.00mm. These screwdriver handles have unique swivel heads with ball bearing for increased sensitivity and feel. Anodized aluminum stand is angled for easy blade selection. Made In Switzerland.

Stock No. 521.700

Just $71.95

Bergeon Deluxe Screwdriver Set



This is the most complete set of screwdrivers available from the most recognized name in the industry. It includes 10 color-coded drivers with blades ranging from .50mm to 3.0mm and a rotating base that weighs almost 2 pounds. You won't knock this set over next time you reach for a screwdriver! The base includes color-coded plastic tubes aligned along the outer perimeter that are used to hold the spare blades. This design means you won't have to fumble with a center cap when searching for spare blades and knock the set over again! Made in Switzerland.

Stock No. BER-3044A

Price $204.75

Band Pin Removing Tool



Used to remove link pins from common bracelet type bands. No more broken screwdrivers or spring bar tools! Spring loaded platform automatically adjusts your working position depending on the thickness of the band. Stainless steel pin measures .80mm in diameter and is replaceable.

Stock No. 592.905

On Sale $12.95

Link Pin & Spring Bar Removing Kit



A handy kit to remove spring bars as well as buckle and link pins.

Kit includes:

- Slotted band block with two storage compartments for spare pins and built in tool stands.
- One hex shaped double-end spring bar tool with screw cap. One end is forked, the other is straight.
- One hex-shaped link-pin removing tool
- Three .8mm link-pin ends
- Three 1.0mm straight end spring bar pins.
- One replacement forked spring bar end.

Stock No. 592.920

Sale Price $15.95

Regular Price $19.95

2/06

6. Tape the bottom of the leader to the seat board or movement so it will not bounce back and forth and damage the escape wheel teeth.

7. Stuff paper or other material between the two sides of the chime rods so they do not vibrate in shipment. Secure with a twist tie. Cardboard with evenly spaced holes works even better.

8. If the door has a lock, tape the key (after locking) to the glass panel. The homeowner has enough to worry about in arriving to the new destination and it will take weeks to find the key. If it is a cable wind clock, do the same with the crank.

After that, your job is done and it is in the hands of God and the movers.

In regards to unpacking the clock:
1. If you are contacted by the homeowner, make certain that you state your conditions to the owner before coming to the home. State your payment conditions—since I am contacted by the homeowner, that is who pays me. He/she can be reimbursed by the industry (e.g. Monsanto) if that is the situation. I am not going to wait weeks for my money. We are brutally frank and tell the owner that since we have no way of knowing the condition of the clock before it was moved, or if it was damaged in the move, there is no way we will warrant that the clock will work after unpacking. We are simply being paid to unpack it and set it up. We have lost jobs because of it and I don't miss the money one bit. I am happy to be rid of the liability.

2. On arriving at the home, note carefully the condition of the case for damage. You may be called as a witness in a suit later. Also, check the general condition of the movement and its age for the same reason and look for any signs of repair such as a sticker with date, bushing work, and cleanliness of the movement. Make notes for yourself for possible use later. It is also a good time to document exactly what movement is in the clock in the event you are called later and it needs work or replacement. It will save a house call in quoting the job.

3. Carefully unpack the weights and pendulum again noting in writing the condition of the pieces including dents, dings, discoloration, etc. I would also bring any case or accessory damage to the attention of the homeowner and make a note that it was discussed.

4. Set up the clock including moon dial and instruct customer as to its operation and how to interpret it. Check the chime and strike through four quarters.

5. At this point, the clock hopefully will at least seem to work fine and you can give the customer your card to call when it needs attention. I would also recommend reminding the client that there is no warranty with the work and mark it as such on his copy of the invoice. It is also possible the clock will not work. At that point you can offer to do what you normally would do under the same circumstance in coming to the home. The difference often is that the customer in this situation will claim the clock ran fine before moving. You will need to stand your ground and remind the customer that you only did the set up and any claims need to be made with the company. If the customer wishes to have the work done and pay you and then collect from the company later, fine. We had a situation in which a corporate executive moved in, the clock was set up and did not run. The customer stated the clock was only a couple of years old. The date was on the unit and it was 15 years old. Customer caught in the first lie. Then he stated the clock was running fine before moving. The wife then admitted the clock was in storage for 6 months. Customer caught in second lie. Then he asked to have the work done and have it written up as moving damage. He was told we would not commit fraud on his behalf. Ultimately he paid for a movement replacement. It is unfortunate that we must be defensive in this trade, but that is part of the business.

Hopefully this will help not only with the clock, but also with the customer.

Final thought: *"If you develop the habits of success, you will make success a habit."—Anonymous.*

SUPPORT YOUR LOCAL AFFILIATE CHAPTER

Log on to www.awci.com to find a chapter near you

For information on forming a new chapter,
call 1-866-367-2924, ext. 304

Questions & Answers

(Continued from page 4.)

late Adolphe Chapiro classifies as a Caliber No. V. This caliber was in common use from about 1840 until stem winding came into common use about 1870. The rough movement (ebauche) would have been supplied by specialized ebauche factories in either France or Switzerland, the largest of which was Japy in Besancon, France.

Without any markings on the case, chatelaine or movement I have no idea who made either the chatelaine or finished the watch movement or in what country the ensemble was made. But from the style of the chatelaine and the watch movement I can say that they were made around 1860 – 1870.

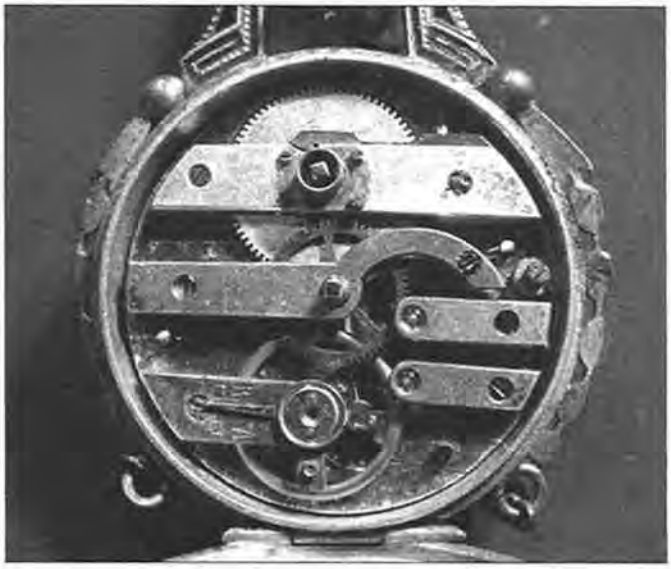

For Unsurpassed Watch Cleaning Performance...

Join the Winning Vibrograf Team...

Serving The Watchmaker For Over 50 Years

THREE PAYMENT PLAN WITH APPROVED CREDIT



RM-90
Automatic infrasonic watch cleaner.
Affordably priced, dependable to operate, solidly built.



MARK V
Ultrasonic watch cleaner.
Economical to operate.
Perfect for the small shop.



ACS-900
Automatic and programmable.
Vibrasonic watch cleaner.
Deluxe — top of the line.

For more information, or the name of your local distributor contact:

VIBROGRAF U.S.A. CORP.
504 Cherry Lane, Floral Park, NY 11001
Tel: (516) 437-8700 Fax: (516) 437-8708

Paul Gerber's Retro Twin

Behind the Curtain

© March 2004

Curtis D. Thomson



Introduction

It is hard to imagine the chief revisionist of the World's Most Complicated Wristwatch, a *tour de force* of horological engineering, and the mind that problem-solves for many in the industry and creates for the same, would find his own brand relatively unrecognized and under appreciated by the larger watch culture, but it's true. Paul Gerber, master watchmaker and AHCI member, has his own line of watches, which bear his name but find themselves in the shadows of the maker's individual accomplishments outside of the brand. Don't be mislead, there is a loyal following of the Gerber brand, but it has not benefited from the celebrity garnered from other projects like one would have expected.

The Gerber line consists of The Retrograd and Retro twin, a pendulette (miniature table clock with flying tourbillon), and a third wristwatch (a new tonneau-shaped in-house caliber, with spherical moon phase accurate to 1 day in 128 years and Gerber's new patented escapement. His atelier is in the basement of his home, which is nestled near the woods of a Zurich suburb. Team Gerber consists of his wife, Ruth, who carries out all of the administrative duties; Martin Schiess, watchmaker, who was Mr. Gerber's apprentice and now an employee of 6 years; Roland Hohl, watchmaker, who has been working in the Gerber atelier for a year, but has 6 years of working experience (4 being with IWC); and finally Mr. Gerber's 2nd year apprentice (an apprenticeship being 4years), Isabelle Kappeler, who follows many before her.

As an aside: Paul Gerber has committed himself to the advancement of watchmaking through not only technical achievement, but more significantly in the training of future watchmakers. An endeavor which, in my opinion, all Master watchmakers should be engaged in. The traditions in the art and craft of watchmaking are being lost. Watchmaking schools tailor their programs to the massive modern after-sales markets, with skills to suit. Now, more than ever, the Master watchmaker needs to embrace the motivated student or aspiring watchmaker and impart the skills and knowledge of a life's work. For all of his horological achievements, I respect Paul Gerber most of all for his commitment to the future of watchmaking and its watchmakers.



Paul Gerber



Mr. Schiess, Mr. Hohl, Miss Kappeler, Mr. Gerber

The Gerber atelier is friendly, but quiet in conversation, organized, full of activity that ranges from assembly and making parts for the Retro Twin, any other Gerber brand product for that matter, to working on specially commissioned jobs for the industry (he has constructed 30 original calibers) or patiently answering questions on the phone and/or for his staff. Of course, there must be time for Mr. Gerber to construct, which was the only thing put on hold during my visit to document the making and assembling of the Paul Gerber Retro Twin, as it was Paul Gerber who took me through the process from A to Z.

Basics

The Retro Twin is based on a rhodium plated manual wind Peseux 7001 and is purchased from Soprod, with their finest available finish. This caliber was chosen for its proven reliability, its availability and its sub seconds design which adapts well to his retrograde seconds construction, as well as providing a suitable platform for his patented double rotor automatic system.

In its original form the movement has a diameter of 23.68 mm and a height of 2.5 mm, with 17 jewels. After modification the Peseux takes on the reference, Paul Gerber caliber 15, which has an increased diameter of 28 mm and an increased height of 5.2 mm, with 27 jewels. The frequency and power reserve are unchanged, remaining 3 Hz and 42 hours respectively. Now that you know the beginning (Peseux 7001) and end (PG caliber 15) of the story, let's discuss the plot.

Modifications

The Retro Twin is extensively modified from its humble beginnings. I know we have read this before, "heavily modified," "scarcely recognizable" and the like, when in fact there hasn't been any significant change at all, but in this case, you will find those descriptions fitting.

The Peseux starts out with a standard sub seconds design and ends up with retrograde seconds, with all necessary parts (arbor, pinion, rack, cam, ring) and modifications (milling portion of movement plate) made in the Gerber atelier. The Peseux starts out as a manual wind movement, but is transformed into an automatic—not any automatic mind you, but his own patented double rotor system. All parts (wheels, pinions, cams, levers, bridges, screws (He used to make 18k rotors, but now they are platinum and made outside the atelier.) and modifications (drilling and tapping holes in movement plates and modifying the barrel for automatic use, with appropriate mainspring) are made in the Gerber atelier. And, for good measure, the dials are made in the atelier, as well.

After the components are made and tested, the necessary finishes are applied, which includes perlage for the automatic bridges and retrograde spacer ring. The brass wheels of the automatic system will receive gold plating; automatic bridges and spacer ring will be plated in rhodium—all of which take place in the Gerber atelier.

Making

It should be noted that, while each watch is assembled in the manner to be described, the parts and modifications are carried out in bunches. That is, parts are made many at a time and not per watch.




Determining how many of the spring's inner coils must be removed to allow the collet to fit properly.


Spring and collet are being pinned together with a brass tapered pin.




Colleted spring placed into jig to determine correct size for use in movment. It is too large currently.


Spring properly fitted into the recess of the jig.

Retrograde System

The first step is to mill out a section from the dial side bridge to allow for the retrograde seconds. This is followed by the fabrication of a three-sectioned brass ring, which fits around the movement housing the bulk of the retrograde system. The three sections are the primary brass ring, which has a milled out area (top and bottom) that corresponds with the position and needs of the retrograde components. The two remaining brass pieces act as bridges and are drilled and jeweled for the retrograde rack and retrograde pinion and spring to be "sandwiched" in between.

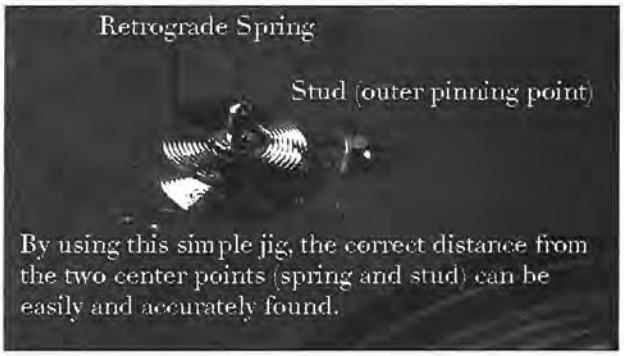

By using this simple jig, the correct distance from the two center points (spring and stud) can be easily and accurately found.

Once the machining is finished on the retrograde brass ring, the individual components may be addressed, which in this case are the retrograde rack and its arbor, the retrograde spring and its arbor and pinion, and the cam. To begin this process the spring, which is a very weak hairspring, must be colleted and pinned. This is done in the traditional manner of "springing," with a round, split brass collet, which accepts the innermost portion of the spring and is held steady by a brass tapered pin. The colleted spring is then placed in a brass jig that has been milled to match the milled section of the retrograde brass ring where the spring will be placed. The jig allows for a very quick trial and error period where the outer coils of the spring are carefully snipped away until the spring fits comfortably in the designated area. Once this has been determined the spring is moved to another area on the jig where there is a small post, which represents the pinion and arbor for the spring, and a small hole, which is precisely placed, for the spring's stud. This jig allows for the correct length of spring from the body to the stud to be quickly and accurately gauged. The spring is now colleted, with stud, so must be friction fitted to the arbor and is done so with a staking tool. The spring is made to be true in the

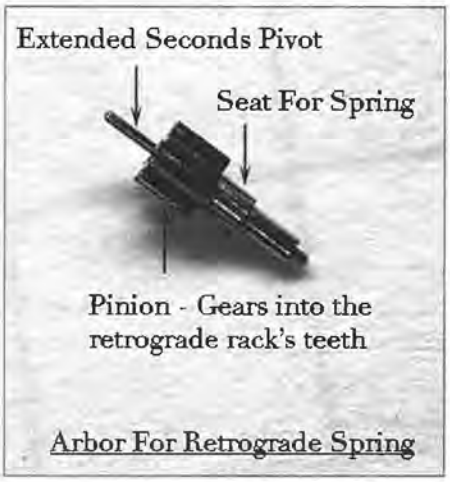





round and in the flat, so the "assembly" is as it should be.

The choice of spring is not an arbitrary one. It must properly fit in the available area given, but not be too strong, as to have an effect on the amplitude by more than 10 degrees. Yet, it must be strong enough to snap back the seconds hand smartly and not bobble or waiver if knocked about. Yes, much testing was required to find the spring to meet these requirements.

With the spring ready and the retrograde rack mounted on its arbor, the two bridges that sandwich these components to the retrograde spacer ring are jeweled and correctly depthed. To do this, each component is individually secured to the spacer ring, correctly adjusted for vertical position in relationship to one another and individual endshake. Once each component appears correct, they are removed from the spacer ring, which is then slipped on the movement and correctly aligned with the milled portion of the movement and held in place by the stem.

Now is the time to discuss the cam. The cam is shaped in such a way to allow the seconds hand to travel the 120 degrees seconds sector accurately. It is made with precision machines, but still requires fine-tuning. The circumference of the cam is smoothed with a Degussit stone, followed by burnishing and polishing to







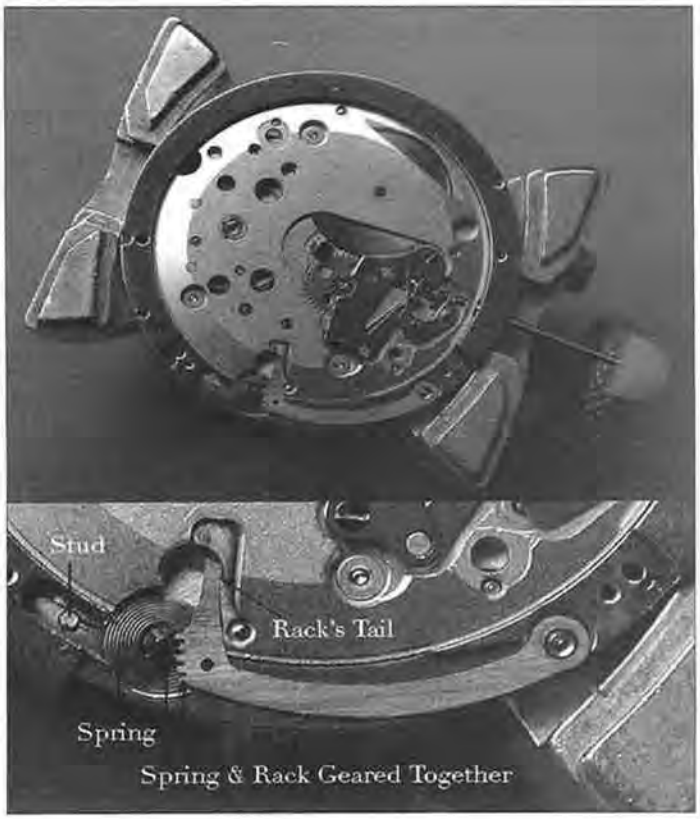



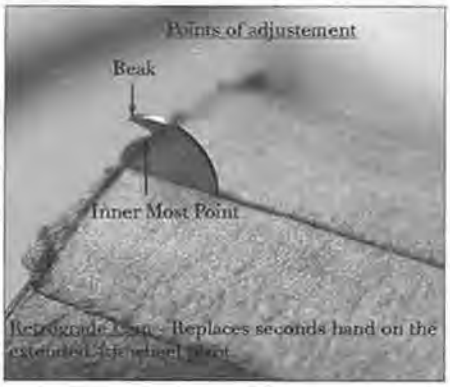



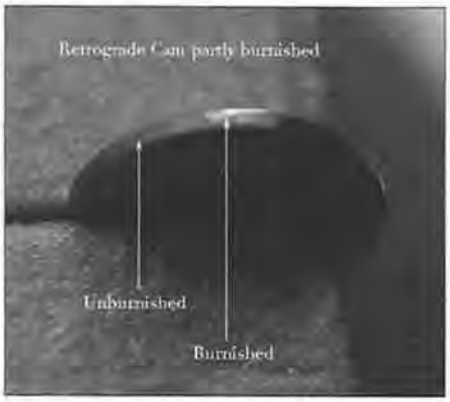





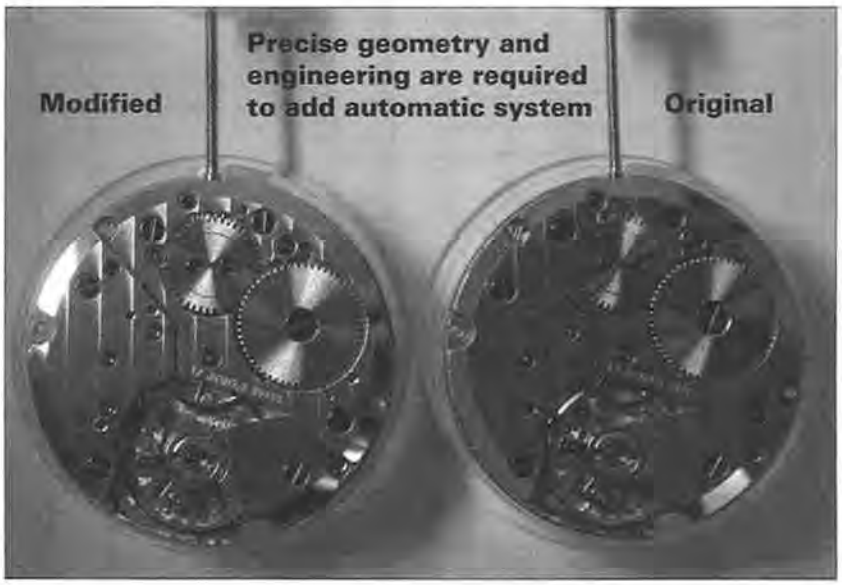

ensure the seconds hand functions smoothly. After this the cam must be adjusted so the action of the seconds hand is correct, i.e., it begins and ends when it should and with the "snap back" desired. This is accomplished by the careful filing away of material from the beak and/or the innermost point of the cam. Using an old damaged dial, the action and travel of the seconds hand is tested and adjusted until correct. This is a very time consuming process of trial and error.

Automatic System

The self-winding mechanism is a dual rotor, unidirectional system, for which Paul Gerber received a Swiss patent. When asked, "Why a dual rotor? Does it increase the efficiency?" he responded, without pause, "No, it doesn't, but it is fun... why not?" One can only smile to such whimsical honesty, but the truth is, this a clever...fun system.

The rotors are planted on the same plane, but on separate axes. The distance between the two axes is "less than the sum of the radii of the circles circumscribed by the associated oscillating masses." -Abstact from Patent CH692539. To prevent the rotors from colliding, a central coupling wheel is used, which makes their movements synchronous. To ensure perfect alignment of the rotors, in relationship to the coupling wheel, a jig is used to secure the rotors to their ball bearings and wheels.

The system is modular, with its own plate and bridge, which is fitted on top of the movement's bridge side. Its plate and bridge are machined with his CNC mill from brass. Several cutters and operations are required to make one plate and its small bridge. After machining, the surfaces must be deburred, smoothed, finished, rhodium plated and then





jeweled. Not content to find acceptable, ready-made wheels and pinions, Gerber makes the 7 gears that make up his automatic system (3 brass wheels, with their associated steel arbors and pinions, a steel gliding pinion, with arm and spring, two steel rotor pinions and a brass coupling wheel) in the atelier as well.

Let's discuss the making of the brass-coupling wheel. From sheet brass the CNC mill cuts the wheel blanks, including the crossing out of the wheels, which is a huge time saver, as the individual maker who wishes to cut their own wheels must either do the tedious and labor intensive crossing out by hand (piercing saw and files) or by use of a pantograph, which is much faster than the hand method, but still requires an operator to be present to guide the cutter. The CNC, on the other hand, gives the operator the freedom to continue other tasks while the blanks are being cut... Well, at least during each operation, of which there are three for the coupling wheel and 5 passes each of the cutter per crossing out!

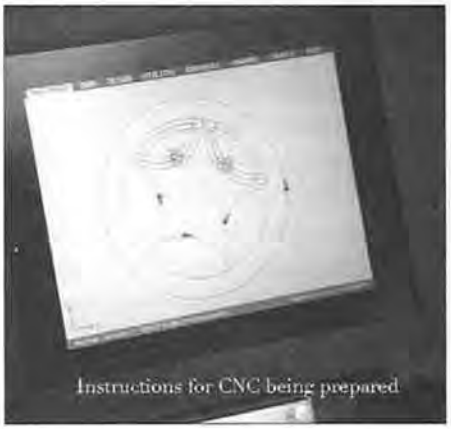
Instructions for CNC being prepared

The wheel blanks then have their burrs and related rough areas removed and smoothed for cutting the teeth. Gerber uses his Schaublin 70 lathe, with its milling attachment for this task. As mentioned above, many components are made/machined at once and cutting teeth in wheels is generally no different. Although, due to the stepped design of the coupling wheel they can't be stacked and sufficiently supported, so these are cut one at a time.

The wheel blank is fitted to an arbor so it may be placed in the headstock of the lathe for cutting, but first the outer diameter of the wheel blank must be trued and brought to size. (It is intentionally left a little oversized during the first steps.) Once


Automatic plates after being milled, via CNC


Milling Coupling Wheel

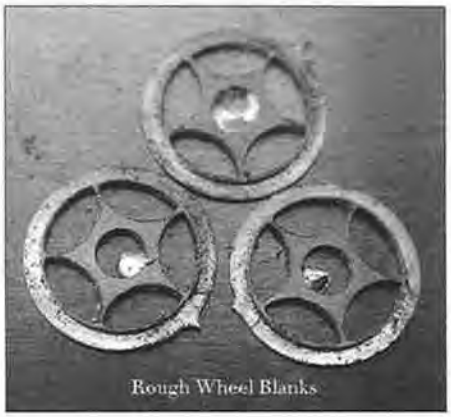
Rough Wheel Blanks


Finished Rough


Milling Coupling Wheel


Truing & Bringing Wheel Blank To Size


Finished - Bottom of Automatic Plate
Gliding Pinion


Milling Coupling Wheel


Centering Cutter

this has been accomplished the correct cutter is centered in relation to the wheel blank and the correct index plate is chosen for the number of teeth to be cut. Having found the centerline, the cutter is slowly brought to bear on a test piece. From this point a slow and measured process of small passes between the center position and one indexed position begins—back and forth, with small increases of depth until one tooth is formed of the correct shape. Once this has been achieved the depthing of the milling attachment is locked and the wheel blank may be cut in full depthed passes.

The completely machined wheel must now be finished. This begins with lapping underneath the wheel at the drill press using 1600 grit emery paper, with the wheel fitted to a brass jig, which keeps the wheel in place and flat while slowly rotating on the emery paper. The lower stepped portion of the wheel is lapped by hand, using the same brass jig. A synthetic stone is used on the upper step and then cleaned in an ultrasonic bath. The upper step is then lapped with 8-micron and 3-micron diamond paste on Plexiglas, with


Checking A Cut


Cutting A Wheel

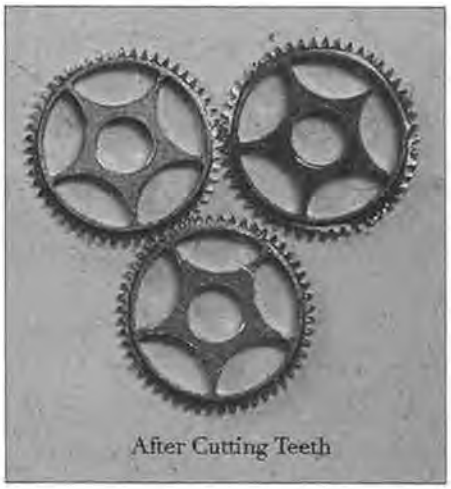
After Cutting Teeth


Removing Burrs


Working With Synthetic Stone


More Finishing


Finish is getting better and near complete




Polishing Platinum Roto


Even though the
are attached using
ensure proper working
action is double checked
First one...

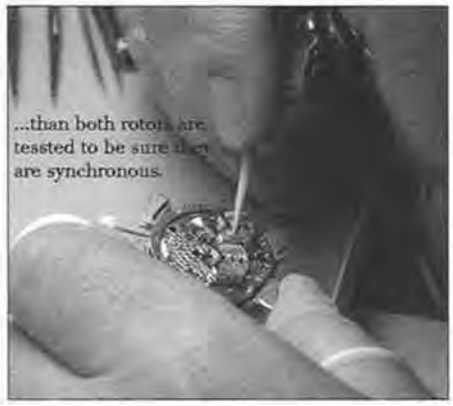
...than both rotors are
tessted to be sure they
are synchronous.



ultrasonic cleaning in between. This is followed by a few strokes on a jeweler's cloth, being careful not to round the edges, and a final ultrasonic bath before gold plating. After plating, the finished coupling wheel has the ball bearings pressed into its center and is now ready for use.

Dial & Rotors

The dials are made in the atelier as well. They are produced from sheet brass and CNC milled, which gives an engine turned effect. The dials are tidied up from machining and then rhodium plated. An outside specialist firm applies the numbers and printing on the dials.

The rotors used to be gold and were made in the Gerber atelier, but long-term field reports indicated they were not sufficiently massive to routinely obtain full wind. All Retro Twins now use platinum rotors, which work superbly, and all older Retro Twins will have their gold rotors switched for platinum rotors at no expense. While the making of the rotors is now handled outside of the atelier, the finishing is done in-house and it takes one hour to polish one platinum rotor using 6- and 3-micron diamond paste.

Assembly

With all necessary parts made, tested in the movement and finished as required, e.g., perlage and gold or rhodium plating, it is now time for final assembly.

After cleaning the movement, non ultrasonic, as he feels it is too harsh for general cleaning, the base movement is assembled in the traditional fashion, making necessary checks/tests throughout and lubricating as required. Having assembled the base movement he conducts the first timing test, no retrograde system, and is striving for 300 degrees amplitude in vertical positions, with +/- 5 seconds/day. Passing the first timing


Plated, Cleaned & Ready For Assembly



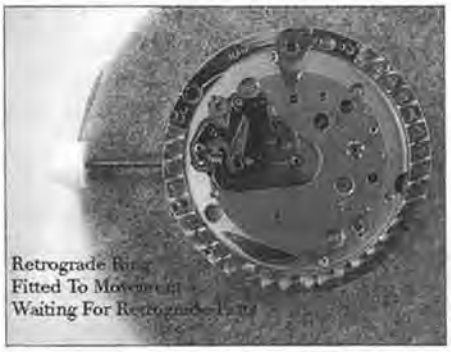
Retrograde Ring Fitted To Movement Waiting For Retrograde Parts





Retrograde Parts




Assembling Retrograde



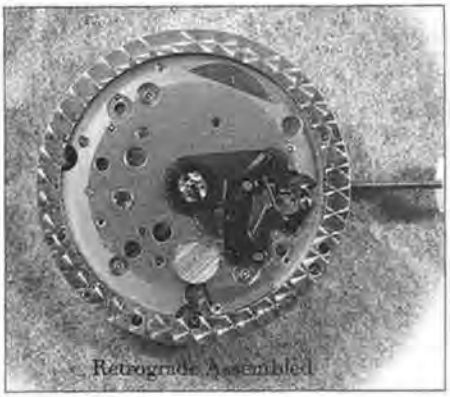
Retrograde Assembled

test the retrograde system is now ready to be installed.

Having slipped the retrograde ring over the movement and aligned it correctly, the retrograde cam is staked onto the seconds pivot of the 4th wheel (this is where the seconds hand would normally be placed), which enables the cam to make one complete revolution per minute. The retrograde spring, which is fitted to an arbor and pinion, with its stud anchored to the retrograde ring, is put in place followed by the retrograde rack. The rack's teeth are geared into the pinion of the retrograde spring, with the corresponding retrograde ring bridge screwed into place and proper movement/endshakes are checked again. The rack's tail is adjusted to ride on the circumference of the cam and as the cam rotates, and its shape changes, the rack is moved, which in turn advances the retrograde spring's pinion "to & fro". This arbor has an extended pivot where the seconds hand will be placed.

With the retrograde system sorted, the dial is inspected and then put into place. Any watchmaker will tell you that one of the most tedious bits of assembly are the proper positioning and adjusting of the hands. While not a struggle, by any means, Mr. Gerber takes his time and shows due care in making the hands "just so." In particular, the seconds hand takes some playing with to get it to begin and end precisely at 0 and 60 on the seconds sector.

Using a special holder, that won't damage the dial or hands, the movement is placed dial down into the holder so the automatic system may be attached. The drive wheel/pinion is geared into the crown wheel, with the automatic plate placed over it and screwed to the movement. The rest of the automatic train is assembled, followed by the automatic bridge, and properly lubricated.


Attaching Dial to Movement

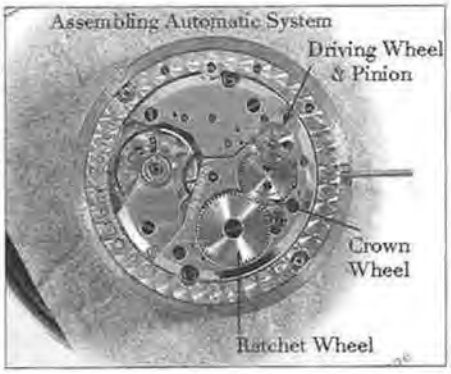


Broaching Hand For Proper

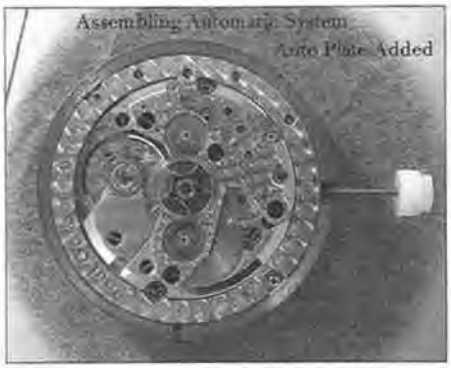


Attaching Seconds Hand Retrograde




Checking Adjustment & Action of Hands













The movement is now ready to be cased. The 18 kt. gold case is blown out, wiped and inspected for quality before inserting the movement. The "working" stem that had been used is replaced with the "real" stem and gold crown. The movement is kept in place via two case screws and the required gasket is added.

The platinum rotors are now screwed into place starting with the rotor that directly gears into the automatic reduction train. The action of the rotor and auto train is then tested. Once satisfied, the other rotor is screwed into place and, even though a jig was used to ensure their proper orientation, their action is tested to be sure they are synchronous. The case back is blown out, wiped, inspected and attached with six screws to the case.

Control

With the movement completely assembled and cased, the final checks, or control, begin. The watch is checked on the timing machine and, now with the retrograde system installed, the amplitude must not drop below 310 degrees in the horizontal position, nor dip below 280 degrees in the vertical positions, while maintaining +/- 5 seconds/day timekeeping. The watch is then moved to an "instrument for checking the winding rate," which simulates the motions of the wrist and provides information about the efficiency of the automatic winding and its power reserve. The watch spends three weeks "on test" and is checked and documented each morning. Having passed the control stage, the cased movement has a strap attached and is placed in its wooden display box ready to be shipped to the purchaser.

Conclusion

While the intent of this article was not to "review" the Retro Twin, one can't help but have an opinion when the process is over. Having witnessed the transformation, from base movement to finished Gerber caliber, two thoughts spring to mind: there is a tremendous amount of design and fabrication involved in making the Retro Twin and, knowing this, the Retro Twin is a great value.

The Retro Twin is not as extravagantly finished as some other watches in this price range, but there is no question that whatever is lost in artistic sensibilities, is more than compensated for with design and first-rate engineering. Two in-house "complications" from the mind and hands of a modern master guarantee a standard and uniqueness that can't be easily found away from the Zurich atelier of Paul Gerber.

*Thank you to Paul & Ruth Gerber for their kindness and generosity during my stay in Zurich. Paul Gerber's website is *www.gerber-uhren.ch*

*To Michel Schmutz of Intro*Swiss, US importer of Paul Gerber Zurich, for his assistance in arranging my visit with Mr. Gerber, and to the watchmakers of Gerber-Uhren who accepted my disturbances with good cheer. Thanks to you all!

Paul Gerber's Retro Twin is reprinted with the permission of Curtis Thomson and ThePuristS.com.

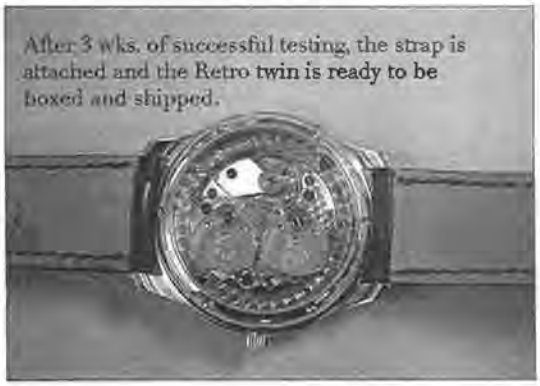
After 3 wks. of successful testing, the strap is attached and the Retro twin is ready to be boxed and shipped.



North Seattle Community College (NSCC)

Open House 2005

Chip Lim, CMW, CMC, CMEW

Photos by Chip Lim

How many of you are on the path to your *personal liberation*? If the route passes through the Puget Sound and Seattle Center, a pilgrimage to the *Experience Music Project (EMP)* might provide some enlightenment (thank you Paul Allen!). Or, one may be drawn to Capitol Hill and Volunteer Park to master techniques of *Jeet Kune Do*. It would only be fitting to follow this with a stop at the nearby Lakeview Cemetery to pay respects to (Bruce) Lee Jun Fan and his son Brandon (both of whom were born in the San Francisco Bay Area). Whatever one seeks, the Emerald City offers a dynamic amalgam of both established and still nascent cultures.

The hallowed halls of the Seattle Community College system have nurtured untold legions of talent, among them a fledgling philosophy student by the name of Bruce Lee. One can only wonder how different things might have been had he pursued a career in watchmaking! Mere days before what would have been his 65th birthday (27 November); the always-busy NSCC Watch Technology Department held an open house in conjunction with a meeting of the Washington Watchmakers-Clockmakers Association (WWCA). Host chapter for the *2006 AWCI Annual Convention and Educational Symposium*, WWCA President Tom Payne provided a conference update and



A few words from Elaine Rolf



Open House

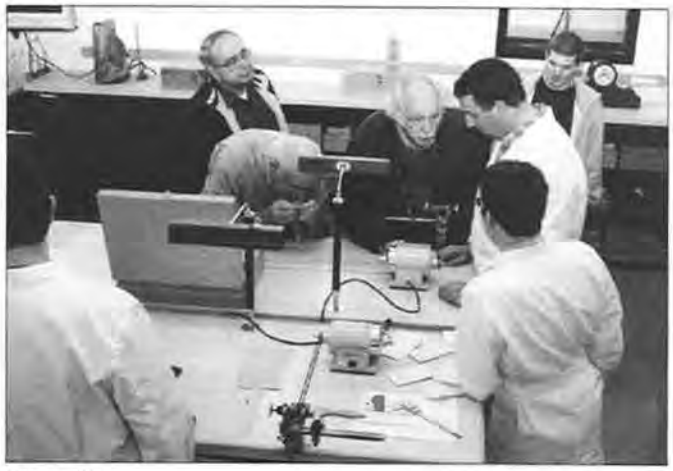

Open House



Open House

The Kronoglass

A semi-automatic pantograph mineral watch crystal grinding machine

Features: 4 Diamond Grinding Wheels
Water Pan with Pump
Plus all equipment necessary to reproduce at least 60 finished crystals

With this machine you can reproduce flat or concave mineral watch crystals with a bevel for watches of any shape. The American Perfit Crystal Corp. is the exclusive distributor for this machine, considered the finest of its kind available.

Replacement parts are readily available!

Contact your watch material supplier today

NOW AVAILABLE!



AMERICAN PERFIT CRYSTAL CORP. 520 EIGHTH AVE. NYC. NY 10018



Watchmaking Class: Jose Rojas, Adam Kantz, Lisa Tam, Garrett Anderson, Ryan Bramlett, Nathan Sparks, Fabian Chavez, Elaine Rolf



Micromechanics Class: Doug Siu, Lars Neilson, Joseph Dickens, Erik Gresseth, John Baldwin, and Caelan Kelly

announced the goal to raise the standards for the program scope and level of excellence. Full details will be published soon. There should also be no shortage of (non-horological) activities to attend during the 3-6 August timeframe—the month-long SEAFAIR celebration culminates with the Chevrolet (formerly Rainer Ale) Cup hydroplane races, the ever-popular U.S. Navy Blue Angels will be featured at the air show, and of course, vessels from the U.S. and Canadian Navies and Coast Guard are scheduled to be in port.

Prior to the Watch Tech open house instructor Elaine Rolf presented an overview of the NSCC program. Last year's graduating class was noteworthy in that it had a 100% pass rate on the Wostep final examinations, an NSCC first. Also recognized was another example of the support that Ben Bridge Jewelers continues to provide the NSCC program. With the unexpected departure of instructor Henry Hatem in August, Erik Gresseth (also an NSCC Watch Tech graduate) has taken a leave of absence from Ben Bridge and has been handling the micromechanics course, providing near-seamless continuity of the program.

With an intensity and level of pride reminiscent of that experienced at the Baselworld Watch Fair, open house demonstrations included the fabrication of student-designed three-quarter plate bridges and other parts for their class watches.



WWCA members



On a clear day...

Although still being perfected, anyone seeing the pieces is unlikely to look at a Unitas 6497 movement in the same way again. Visitors were also afforded the opportunity to see the watchmaking class' unofficial mascot, a muskrat skull: *"This is to remind me of what will happen if I don't pass the course."* And they say that watchmakers don't have a sense of humor!

"Knowing is not enough; we must apply. Willing is not enough; we must do."—Bruce Lee



Stay tuned!



Dr. Paul Stairs

Business Basics

Part 2

Last month we talked about the balance sheet and the income statement and how they can be used to develop some ratios that we can use to evaluate the overall health of our finances. We turn our attention this month to a topic that, for me at least, was a little more difficult to fully understand the first time around: the subject of sources and uses of cash and the cash flow statement.

Cash does indeed flow and if we think about it, we can imagine that this flow is circular. A bank is really the best example for our purposes: some people may borrow money from the bank (the bank serves as a money source; the borrower is a money user) while others are putting money into the bank for investment (the investor serves as a money source; the bank is a money user). You illustrate the cycle in your trade as well: you use cash to buy parts for a repair and then you receive cash from your customer to compensate you for the part and your time and ability to do the repair. You then take that money and use some of it in your operational budget and perhaps invest the rest.

Let me interject one term here that may tend to trip people up as it did me. When I use the term "shareholder" later on in this article, I mean all people who *may have a claim upon the assets of your company* (vendors, the bank, your employees, etc.). I want to make it clear that I am NOT talking about "stockholders" who would refer to people who have put money into your company and now have some equity in return for their investment.

Now back to the story. In order to understand the cash flow statement fully, it is necessary for us to put our "sources and uses" concept to the balance sheet. We need to determine whether a change in any of our assets is a source or a use of cash. Stick with me because this is the point where I started to say "huh?" the first time I was introduced to this concept.

Any time that we have an increase in an asset, we are USING cash. For example, if we take two balance sheets (say, three months apart) and lay them side-by-side and look at inventory, we will undoubtedly notice some differences (see Figure 1). If there has been an increase in inventory, then inventory has been a use of cash. It must be, the inventory did not just multiply on its own, and we must have used cash to increase our inventory over the time period that we are looking at. *The same can be said for any increase in our assets; in order to increase assets over some period, we must use cash.* An increase in cash is even a use of cash!

Now let's suppose that we examine our two balance sheets and notice that accounts receivable has decreased over the time period for the two statements. We must have collected some of the money that was owed to us from credit sales; therefore, the decrease in accounts receivable represents a source of cash. *The same can be said for any decrease in our assets; when some asset decreases over some time period, it must have been a source of cash.* Follow along the right side of Figure 2 (a sources and uses statement) to see what happened to cash as our assets changed.

What about liabilities? Flip side of the coin from what we said about changes in assets. Take, for instance, a change in accounts payable. Let's say that we are comparing two balance sheets and we notice that there has been a *decrease* in accounts payable from one statement to the next. How did this happen? Did our creditors suddenly decide

AAA Watch and Clock Repair & Sales

Balance Sheet Comparisons

	Sept. 30, 2005	Dec.31, 2005	Increase(Decrease)	
Current Assets				
Cash & Marketable Securities	$3,900	$2,500	-$1,400	Source[1]
Accounts Receivable	$6,500	$12,765	$6,265	Use
Inventory	$223,927	$212,567	-$11,360	Source
Prepaid Expenses	$1,200	$2,000	$800	Use
Hand Tools	$2,100	$2,100	$0	
Total Current Assets	$237,627	$231,932	-$5,695	
Current Liabilities				
Accounts Payable	$13,755	$24,500	$10,745	Source
Wages Payable	$12,525	$17,800	$5,275	Source
Taxes Payable	$15,095	$7,250	-$7,845	Use
Current Portion of LTD[2]	$25,870	$12,000	-$13,870	Use
Total Current Liabilities	$67,245	$61,550	-$5,695	

Notes

[1] Yes, believe it or not, a decrease in cash is a source of cash!

[2] "Long Term Debt"

Figure 1. Balance Sheet Comparisons

to cut our bills in half because they won the lottery? No, we obviously have paid them something on our bill so that, in aggregate, our accounts payable has gone down and we have used cash to decrease them.

Now we look at notes payable (or any other liability) and note that it has *increased* in dollar value. This has happened because we took out a one-year fixed-rate

AAA Watch and Clock Repair & Sales
Sources and Uses Statement
For the Quarter ending Dec. 31, 2005

Sources	
Reduction in Cash	$1,400
Reduction in Inventories	$11,360
Increase in Accounts Payable	$10,745
Increase in Wages Payable	$5,275
Total Sources	$28,780
Uses	
Increase in Accounts Receivable	$6,265
Increase in Prepaid Expenses	$800
Decrease in Current Portion of LTD	$13,870
Decrease in Taxes Payable	$7,845
Total Uses	$28,780

Figure 2. Sources and Uses Statement

Learn to Engrave and Set Stones



Add beauty and value to clocks, watches, jewelry, and more by learning to Engrave and Set Stones in a special 5-day GRS combo course. Only two Combo classes available this year: May 15 - 19 and September 25 - 29. Our easy-to-learn techniques and tools accelerate and simplify engraving and stone setting, so YOU will learn in a fraction of the usual time. Your instructor for the Combo class is Christian DeCamillis, an experienced World Class expert in the business. Class size is limited to guarantee a low pupil-to-instructor ratio with plenty of hands-on instruction.

Work hands-on at your assigned, fully equipped workbench. Join 11 other students that have the same desire to engrave and set stones as you do.

Call NOW...*seats are limited.*

1-800-835-3519

GRS@GrsTools.com



GRS • TOOLS • TECHNIQUES • TRAINING

Glendo Corporation
900 Overlander Road
Emporia, KS 66801

MORE GRS classes to select from:
www.GrsTrainingCenter.com

loan from our local banker. The loan is then a source of cash to us. Take a look again at Figure 1 and go over each entry and think why that entry is either a source or a use of cash. In summation, then, any decrease in liabilities represents a use of cash and any increase in liabilities is a source of cash. Notice especially that our sources and uses must balance (unless we are cranking off twenties down in the basement) and this is intuitively clear; we can't spend money that we don't have. If all this doesn't make complete sense at this point, don't feel bad. It didn't to me the first time around either but if you re-read the last few paragraphs and think about it, it will gradually begin to come into focus.

So now you know how to make up a "sources and uses" statement. Was this just some academic exercise that I put you through or does it have some practical usage? Actually we will use the sources and uses statement to develop the newest kid on the block as far as financial statements, the cash flow statement. Let's take a look at Figure 3, which is a cash flow statement for our hypothetical watch and clock repair business introduced in the first article of this series. Right off, notice that there are three separate parts to cash flow statements: cash flows from a) operating activities, b) investing activities, and c) financing activities.

AAA Watch and Clock Sales & Repair

Statement of Cash Flows

For the Quarter Ending Dec. 31, 2005

Cash Flows from Operating Activities		
Net Income	$20,214	
Depreciation	$12,097	
Amortization	$14,776	
Changes in Current Assets and Liabilities		
Reduction in Cash	$1,400	
Reduction in Inventory	$11,360	
Increase in Accounts Payable	$10,745	
Increase in Wages Payable	$5,275	
Increase in Accounts Receivable	-$6,265	
Increase in Prepaid Expenses	-$800	
Decrease in Taxes Payable	-$7,845	
Decrease in Current Portion of LTD	-$13,870	
Net Cash from Operating Activities	$47,087	
Cash Flows from Investing Activities		
Proceeds from sale of property, plant & equipment[1]	$600	
Additions to property, plant & equipment[2]	-$1,400	
Net Cash from Investing Activities	-$800	
Cash Flows from Financing Activities		
Common stock re-purchases	$0	
Issuance of common stock	$0	
Net Cash Used by Financing Activities	$0	
Net Increase in Cash	$46,287	
Cash at Beginning of Period	$2,500	$48,787
Cash at End of Period	$48,787	

Notes:

[1] Proceeds from sale of old quartz watch analyzer

[2] Cost of new quartz watch analyzer

Figure 3. Statement of Cash Flows

Let's start with what really brings home the bacon—the operating activities of our firm. To net income (which we got from the income statement) we add back all non-cash items, such as depreciation. Remember that depreciation is a NON-CASH item and we only included it on the income statement to account for its effect on the taxes we would have to pay. Now we utilize the knowledge we obtained from the sources and uses statement to account for changes in current assets and liabilities. We simply group all sources of cash together and do the same for all usages of cash. When we total up these items we have *net cash flow.*

A word about nomenclature: you may hear of net cash flow, free cash flow or some other variant thereof. What we are concerned with is *free cash flow.* This is the money that is available to all shareholders (recall our definition of shareholders as anyone with a claim upon the assets of the company); it is the money that we either use to pay debts or taxes and/or put in our pocket and take home.

Let's move on to cash flows from investing activities. To illustrate this category, we will suppose that we have advertised in the *HT* and found a buyer for our old but usable quartz watch testing equipment and we have sold

that equipment for $600. We have decided to purchase a new state-of-the-art quartz watch tester because our quartz watch business is really booming. We have expended $1400 for the new tester. We would show on our cash flow statement, under investing activities, $600 in proceeds from the sale of our old equipment and indicate the $1400 investment in a new machine under additions to plant, property and equipment. Under other, we list any other cash flow activities that are of an investment nature.

The third subsection I have included more for completeness sake than for its utility to the clock or watchmaker. Very few, if any, of you will have your company structured as a business entity where you are concerned about stock re-purchases or stockholder issues in general. Notice however, that this is a third activity where cash flow from financing activities enter into the consideration of total flow of cash into and out of the business.

When we have determined the net cash used or provided by the three sections, we may total these to come up with the net increase or decrease in cash for the period we are examining. We can then add our incremental increase in cash to cash at the beginning of the period to yield the final entry, which is cash at the end of the period. Of course, the ending cash for one period becomes the beginning cash for another period, which I have indicated, in the third column in this figure.

I had thought initially about including in this part of the series, the discussion about cash budgeting; however after some reflection, I think that I will leave this topic for the next article. My rationale for this choice is that the statements we have been discussing up to this point all deal with our financial performance at some time *in the past.* Cash budgeting is a form of cash "forecasting" that relates to our future expected needs. In fact, much of what I am going to be talking about from here on out deals with predicting, as best we can, the cash flows into and out of our company. So, next time, we will resume with cash budgeting and then move on to such topics as the time value of money and the concept of discounting.

706 S. Hill St., #580
Los Angeles, CA 90014

SMITH SUPPLY HOUSE
LOS ANGELES

Tel: (213) 622-1687
Fax: (213) 488-0922

Watch Materials, Supplies & Tools

Watch Battery Distributor

OSCILLATING WEIGHT AXLE PUNCHERS

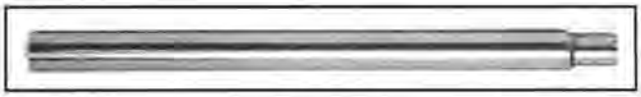

#1 FOR CAL. **1530 SERIES**

#2 FOR CAL. **2030 SERIES**
2130 SERIES

#3 FOR CAL. **3035 SERIES**
3135 SERIES





$29.75 / EACH

NEW IMPROVED VERSION

YOUR SUPPLIER OF SPARE PARTS FOR ALL BRANDS OF
MECHANICAL AND QUARTZ WATCHES, CLOCKS AND ALARMS

SMITH SUPPLY HOUSE IS NOT AFFILIATED WITH OR SPONSORED BY ROLEX WATCH U.S.A.
THE ROLEX WARRANTY DOES NOT APPLY TO GENERIC REPLACEMENT PARTS SUPLIED BY SMITH SUPPLY HOUSE

JIDA

CALL TOLL FREE (800) 23-SMITH

AWI



Certification Central

ANSI Standards: on the Horizon?

Vincent E. Schrader
Ph.D., CMW
Chief Examiner

The most important recent change in AWCI's certifications and assessments has been in the setting of standards and the changes in our processes of testing. I have written about these changes before, but should re-emphasize this, in light of important national developments. Recently, Director Jim Lubic forwarded to me an announcement from the American National Standards Institute (ANSI) that the "General Requirements for Bodies Operating Certification Systems of Persons has been developed for international use with active participation by the United States." Part of the memo states "A variety of professionals across a wide range of occupations are now required to pursue certification as a means of demonstrating that they have the necessary knowledge, skills, and abilities to perform their work. Given that there are over 2,000 agencies who declare they certify individuals, ANSI/ISO/IEC 17024 is an exemplary basis for assessing and recognizing the competence of the bodies offering such certification" (Lane Hollenbeck, ANSI vice president for conformity assessment.)

To translate: as a certifying body, AWCI is now in a position to submit its standards and certification procedures for scrutiny by national and international standard-setting bodies, and given that we meet muster (and I believe we will) our organization's certified members can become nationally and internationally recognized for their expertise.

This is a very big step. I'm sure that this topic will have been discussed at our (February) mid-year meeting of the Board of Directors, which will have occurred right around the time you read this. Should the board concur that it is to our very great advantage to push forward with our standards efforts, (e.g., to demonstrate the "competence of the body granting certification") we are in a perfect position to approach ANSI.

There has been a fair amount of questioning about the education committee's "slowness" toward meeting our goals over the past two and a half years, but having personally been a part of standards writing efforts many times, I believe we have made exceptional progress. And because of the tireless efforts of many volunteers we have come to the point where today we are in a prime position to talk to anyone who wishes about our capabilities to issue certification, validly, reliably and with great professionalism. These are exciting times.

Misperception: "Old Test/New Test?"

I recently read on "AWI matters" that "there was nothing **wrong** with the old exam other than that it simply didn't apply to 'high-end' watch repair like the new CW exam." This is a total misperception of both the new and the old exams.

While our new **title** speaks to modernization by the implication of the use of the words "21st Century," potential candidates should not be confused. The content of the new test has changed to give it greater validity with current watchmaking products and repair procedures. Some of this has been accomplished by shifting performance tasks among certification levels. For example, modern chronographs are now a part of the CW

exam, unlike the old. Of course, chronographs will also be part of the new CMW as well, but the expectation for the depth of CMW knowledge will be greater at that higher level.

There are other significant shifts as well. Some performance tasks and knowledge were "pushed down" into an AWT category. You can see these changes by looking through the Standards and Practices and studying the knowledge, skills, and dispositions expected of each level of certification. Of course, since there was no formalized structure to AWI's process to begin with (i.e., no standards had ever been adopted), you basically have to infer (where possible) from the old tests and performance tasks to see how the changes unfold. This was not easy for the standards writers. Much of the information needed for the establishment of knowledge statements was never formally captured in print. Some of what we needed was laid to rest in graveyards across the country, and much of what we needed was in disarray as to the philosophical approach we would take to develop standards. Nevertheless, it happened. A systematic approach has been applied and we can guarantee fairness of assessment and application of all assessment procedures. Very soon (hopefully by the time you read this), our clockmaking standards will have taken on life as well.

"High End Assessment?"

Lest you think that the new test is for "high-end" repair only, be aware that the movements we use in our new test, although the latest production models, are fundamentally no different in many ways than basic timepieces of the past. We have, thus far, used only ETA calibers. ETA, according to Alessandro Betti of Swatch Group (owners of ETA), manufactures three grades of timepieces in terms of basic quality. One grade is sold for use in lower priced timepieces, and frequently is used for educational purposes. The second category is one which finds itself in more common mid-range mechanical watches, and the third category is sold to "high-end" companies, who then "trick them out" (to use a modern term), to fit their needs. Some ETA calibers are custom ordered as well.

The bottom line is that the watches we use for examination are not specifically "high-end" timepieces. They are good, solid timepieces, which fit the criteria of our standards and practices very nicely. There are autowind mechanisms, balance wheels, mainsprings,

SUPER WATCH MATERIAL HOUSE SINCE 1972

FERRELL & CO., INC.

635 Hill Street, #204 Los Angeles, CA 90014

Orders 1-800-523-7534

Information & Inquiries (213) 627-6031

Fax (213) 236-0755

E-mail: ferrellandco@aol.com



TAG Heuer Bezel Inserts

To Fit 980.020R

Blue Silver or Black Silver

$24.99



OMEGA Bezel Inserts

To Fit Seamaster

Blue Silver or Black Silver

$24.99



TAG Heuer Push Buttons

To Fit Case CG1100 & CA1212 (generic)

$33.00 each

CALL FOR OUR COMPLETE MOVEMENT & BATTERY PRICE LIST

FERRELL & CO. IS NOT AUTHORIZED BY OMEGA or TAG HEUER

escapements... all the same stuff that makes a mechanical watch "mechanical." Our test is designed to allow an individual to demonstrate his/her skills, as outlined in the standards document, regardless of whether or not he/she wishes to find work down the line as a Rolex repair person, or as someone who simply wants to make a living working on older, traditional mechanical watches. Each watch is "tested" before we introduce systematic errors, and the rate recording is kept on file by Manuel Yazijian. In most instances the watches are either new, or "like new," as any unacceptable component is discarded and replaced with a "factory fresh" part.

The Electronic Component

You may be wondering, " but what about the electronic component."

For a number of years AWI chased rapidly moving electronic technology which has so greatly affected our profession, but rarely was able to mount a successful educational or assessment attack on this new technology as it changed virtually day-to-day. I remember taking an AWI course on replacing a capacitor on an LCD movement! We all know the story regarding electronics today. Generally, electronic movements are available for replacement at prices that outstrip our own investment in time. In almost all cases, it is foolhardy to even spend time thinking about repairing a module. They are just too inexpensive to fool with. This does not absolve the CW, however, from certain basic knowledge requirements, or skills demonstration. Many very "high-end" timepieces use fundamentally the same modules as you may find in the "big box" stores. Again, "tricking them out" is used...gold plating, jewelling, special colors of circuit board, engraving... all may be used to differentiate what is fundamentally the same basic component. One assumes that the more expensive versions have also had thorough electronic "shakedowns" (base consumption, etc.) before use by companies who wish to insure that their name is synonymous with integrity and reliability.

The "modular" approach to newer electronic components in timepieces is such that even if you encounter a bad module in our examination process, you can simply ask for a replacement. The issue in our exam, however, is do you know enough to PROVE it's bad? This speaks to some simple electronic testing processes, easily mastered by most of us. Beyond this, our electronic timepiece component performance assessment contains some very traditional demands (like proper cleaning) and electronic testing to insure that the candidate understands the "nature of the beast" he is working on. This is a reflection of today, and those who have taken the exam will no doubt testify that what we ask of candidates is professionalism, knowledge, and a fundamental grasp of some very basic skills...the same as for the other tasks they perform.

While I'm on the topic, I hope someone has considered that the Hamilton 500 models and Accutrons are now "vintage watches." And anyone who plans to take on the task of restoring or repairing one of these is going to need a lot more knowledge than is required on our CW exam. (These now fall into CMW territory.)

Recent Successes

In our most recent certification scoring round, we were able to train one new scorer, while assessing 51 timepieces. In the next issue, I would like to walk you all through this process, so that you understand the efforts we have made to assure fairness and accuracy. The process is very impressive, and is palpably the work of some truly outstanding horologists.

At this particular point we are seeing roughly between 60 to 70 percent of our candidates being successful in their attempt at meeting our standards. Our numbers are still too low for meaningful statistical analysis. We do have a fairly large number of candidates in the "pipeline" at the moment, so if certification is your goal, you should think seriously about when you would like to seek certification, or upgrade your current certificate. We are announcing assessment dates a year in advance, and will add dates if the demand is great enough.

Course work is being initiated at Harrison, and some of our REC schools report picking up "foreign" students (e.g., people are starting to seek out schools for training that are farther than their home town!)



Examiner consults scoring rubric while assessing a timepiece.



Dan Mongeon taking the Certified Watchmaker exam.



John McMaster taking the Certified Watchmaker exam.

Thanks to Okmulgee

I would like to add my personal thank you to the Okmulgee, OK School of Watchmaking, and to Stan McMahan, Ben Han, Wit Jarochowski, and particularly Dan Mongeon, for their generous assistance during the November assessment.

Dan in particular was a very gracious examinee/host and provided me with an enormous amount of help, given this was a "solo" administration for me. By the way, Dan's recent article on the wearing of lab coats and establishing a professional demeanor in the Chronometer Club's newsletter was outstanding and the topic fits perfectly (pun intended) with the idea of the professionalism our standards are intended to promote.

• Phone: 800-772-3456
• Fax: 800-900-3734
• E-mail: info@ofrei.com

OTTO FREI
Watch Parts Since 1930

126 Second St., Oakland, CA 94607

Visit our web site
www.ofrei.com
Shop online for over 12,000 items

Four Different 'Quick Pick' Luminous Hand Assortments – 14 pairs for Just $16.60!



Save big money when you buy luminous hands in one of our Quick Pick assortments. Just $16.60 gets you 14 pairs of hands. Choose from three assortments in popular hole sizes -- 65/100, 70/120 or 90/150 -- or a fourth for hard-to-find large hole sizes*.

*For Unitas 6497, hole sizes 115/200, Valjoux 7750 & 7751, hole sizes 120/200, and ETA quartz series 251.262 to 251.272, hole sizes 150/200.

Quick Pick Assortments

Hole size	Item no.
65/110	QP14-65-110
70/120	QP14-70-120
90/150	QP14-90-150
Large	QP14-115-120/150-200

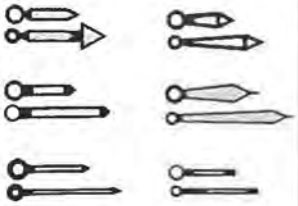

Great Deals, Quantity Pricing on 70/120 & 90/150 Luminous Hands

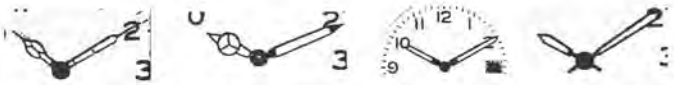

HAN-6100 Gold | HAN-6001 Silver | HAN-6252 Black | HAN-6153 Gold



HAN-6020 Silver | HAN-6191 Gold | HAN-6023 Silver | HAN-6125 Gold

Quantity Pricing

Qty per style	Price per pair
1-2	$3.40
3-11	$2.50
12-99	$1.66
100+	$1.42

Most hands shown above are available in gold, silver and black, with white or green luminous material

Ask for a copy of our Movement Catalog with a more complete listing of our hands.
Orders 800-772-3456 Inquiries 510-832-0355 Fax 800-900-3734

AWCI ACADEMY WATCHMAKING CLASSES

Manuel Yazijian, CMW Instructor

AWCI is offering a series of watchmaking classes throughout 2006. The series will consist of ten 5-day sessions covering a variety of subject matter. Each 5-day block will cost $475.00. For additional information, contact Education Coordinator, Nancy Wellmann nwellmann@awci.com or call (866) 367-2924, ext. 303

February 13 – 17	**Servicing & Adjusting Modern Mechanical Chronographs**
March 13 – 17	**Basic Watch Repair, Adjusting and Timing**
April 3 – 7	**Introduction to Basic Quartz Watch Repair & Quartz Chronograph Repair**
May 15 – 19	**Servicing & Adjusting Modern Mechanical Chronographs**
June 5 – 9	**Introduction to the Watchmaker's Lathe**
June 19 – 23	**Servicing Modern Automatic Watches, timing & adjustment**
July 17 – 21	**Servicing Modern Automatic Watches, Their Adjustment and Timing**
September 11 – 15	**Servicing & Adjusting Modern Mechanical Chronographs**
October 23 – 27	**Basic Watch Repair, Adjusting and Timing**
November 6 – 10	**Introduction to Basic Quartz Watch Repair & Quartz Chronograph Repair**

(No courses offered in August and December)

AWCI CERTIFICATION EXAM SCHEDULE

Certified Watchmaker & Certified Master Watchmaker

February 20-23, 2006	**Lititz Watch Technicum**	**Lititz, PA**
March 20-23, 2006	**AWCI Training Facility**	**Harrison, OH**
April 24-27, 2006	**AWCI Training Facility**	**Harrison, OH**
May 22-25, 2006	**AWCI Training Facility**	**Harrison, OH**
June 19-22, 2006	**North Seattle Community College**	**Seattle, WA**
July 24-27, 2006	**Saint Paul College**	**Saint Paul, MN**
August 21-24, 2006	**AWCI Training Facility**	**Harrison, OH**
September 18-21, 2006	**AWCI Training Facility**	**Harrison, OH**
October 2-5, 2006	**Oklahoma State University**	**Okmulgee, OK**

To register for an exam or for more information contact Education Coordinator, Nancy Wellmann at nwellmann@awci.com or call toll free 1-866-FOR-AWCI (367-2924)

AWCI 21st Century Certified Watchmakers

The AWCI members listed below have successfully completed the AWCI Certified Watchmakers exam.

Certified Master Watchmaker (Upgrade)
David Christianson, CMW — Kendallville, IN

Certified Watchmaker
Joshua Adams, CW — Manheim, PA
Elvira Camacho-Hodges, CW — El Paso, TX
Lovell Hunter, CW — New York, NY
John R. Lemaster, CW — Amarillo, TX
Peter Logsdon, CW — Salt Lake City, UT
Daniel L. Mongeon, CW — Belleville, IL
Roy Reynaud, CW — Tampa, FL
Brian Schupbach, CW — Lansing, MI

Correction
In the December 2005 HT, page 6, Glenn Rutledge's home town was reported incorrectly. It should have read: Glenn Rutledge, CW—Marshfield, MO

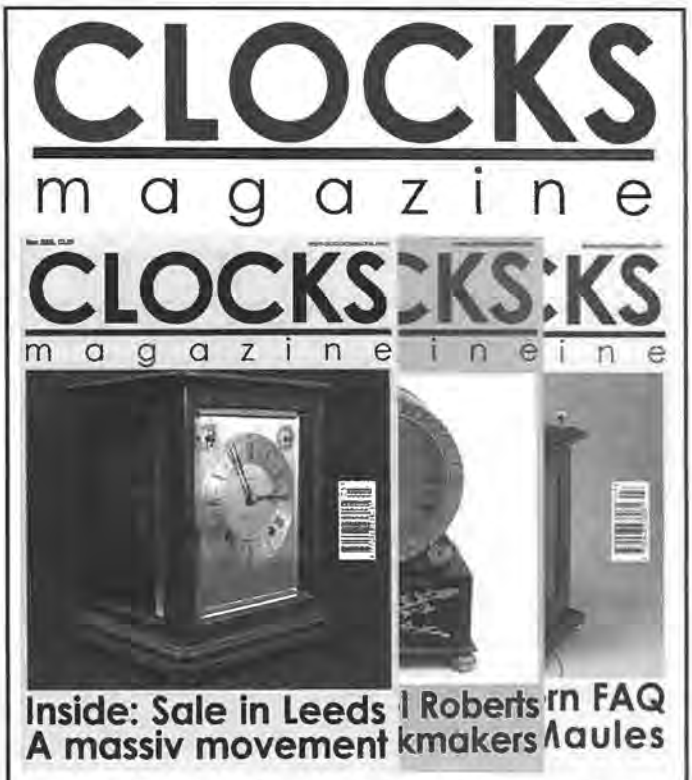

GET YOUR FREE SAMPLE COPY OF CLOCKS
Tel: 044 131 331 3200
Email: sample@clocksmagazine.com

Receive 100 Free Watch Crowns*

With the purchase of BESTFIT 111 & 111A Encyclopedia of Watch Parts!

Hurry! Limited supplies left!

Reprints now available for a limited time only! The "Bible" for watch parts. Over 800 pages of valuable information! Ready to ship!

BK111/111A **$74.95 per set**

**While supplies last. Free watch crowns are presorted.*



Look for us at the following two conventions:
Midwest Jewelers Expo, March 25th & 26th, in Madison, Wisconsin &
the Jewelers Executive Conference, in Kansas City, Missouri, April 1st & 2nd

JIDA

TC TWINCO

Twin City Supply
www.twincitysupply.net

2230 Edgewood Avenue South
Minneapolis, MN 55426-2823

AWCI

Phone: 952.545.2725 Fax: 952.545.4715 • USA: 800.328.6009 Fax: 800.328.6001

2.06 HT

2006 ETA SA Training Courses

ETA SA, a Swatch Group Company, will offer new technical training courses in 2006.

Founded on its solid experience in the area of quartz and mechanical movements, ETA SA is able to provide a variety of horological courses to its clients and the professional organizations of the industry. These courses have been designed for specialists as well as sales and administrative personnel of the watch industry in mind.

The increasing diversity and technical complexity of the products make it crucial to keep step with innovation. So it is that for over 40 years ETA's training program has been equipping professionals with in-depth knowledge of how its products function.

This training programme reflects the determination of ETA SA to provide excellent standards of training so as to fully satisfy the requirements of its clients in terms of knowledge of its products.

The course program of ETA SA for 2006 is the following:

- Basic and improvement course on quartz movements and autoquartz products (A1) for watchmakers and repairers
- Update on new ETA products (A2) for watchmakers and repairers
- Specialization course on ETA mechanical chronographs (A3)
- Specialization course on ETA quartz chronographs (A4)
- Individualized course for technical or administrative personnel (A5)
- Refresher course (A7) on mechanical watches, excluding chronographs
- Technical training seminar (knowledge of mechanical and quartz products) for sales and administrative personnel (D1)

Contact: ETA SA Manufacture Horlogère Suisse, Training Centre, Bahnhofstrasse 9, 2540 Grenchen, Switzerland. Phone: +41 (0)32 655 27 72, Fax: +41 (0)32 655 71 74, E-mail: etaformation@eta.ch Internet: www.eta.ch

ETA Combination Course
Basic Quartz (Time and Date only) &
Mechanical Automatic Chronograph Watch Repair

March 27-31, 2006

Instructor: Alessandro Betti (ETA Swatch Group representative from Switzerland)
Location: AWCI Training Center - Harrison, OH

Five (5) day course on:

- Introduction to Basic Quartz Repair, Electronic Measurements and Diagnostics using the Witschi Q Test 6000 testing equipment.
- Introduction to the ETA Modern Mechanical Chronograph, diagnostics and adjustments.
- Calibers covered:
  Quartz ETA 955.112 and 955.432
  Mechanical Chronographs ETA 7750, 7751, 7753

Course Fee: $495.00 (AWCI membership required)

Mr. Betti accepts 12 people per class, and registration is on a first come, first serve basis.
For further information, or to register for the class contact **AWCI Educational Coordinator, Nancy Wellmann.**
Nancy can be reached at nwellmann@awci.com, or (866) 367-2924, Ext. 303

ETA TECHNICAL TRAINING 2006

Designation	Type of course	Participants	Duration	2006 Dates	Language	Place
A 1	**Basic and improvement course** about the whole range of ETA quartz products including the autoquartz technology (except chronographs)	**Watchmakers & repairers** who would like to learn the basic knowledge of ETA quartz products and the autoquartz technology	3 ½ days	May 15 - 18	English	ETA Grenchen
A 2	**Updating course about the latest ETA products**	**Watchmakers & repairers** who would like of being informed over the latest ETA products	2 days	June 26 - 27	English	ETA Grenchen
A 3	**New specialization course** about the ETA mechanical chronographs	**Watchmakers & repairers** who followed a basic course and wish a specialization course on ETA mechanical chronographs	3 ½ days	April 24 - 27	English	ETA Grenchen
A 4	**New specialization course** about the ETA quartz chronographs	**Watchmakers & repairers** who followed a basic course and wish a specialization course on ETA quartz chronographs	3 days	November 13 - 15	English	ETA Grenchen
A 5	**Individualized course** for technical or administration personnel, organised on request	***Watchmakers & repairers** ***Sales and administration personnel**	variable (according to request)	as requested (minimum number of participants for the organisation of a course: 5)	English	as requested
A 7	**Refresher course on mechanical watches** about the whole range of ETA mechanical products (except chronographs)	**Watchmakers & repairers** who wish to refresh their knowledges about the servicing of ETA mechanical watches	3 ½ days	September 25 - 28	English	ETA Grenchen
D 1	**Technical training seminar** product knowledge about ETA mechanical and quartz watches	**Sales and administration personnel**	1 day	on request	English	ETA Grenchen

Enrolments, informations and course programs:

ETA SA Training Center, Bahnhofstrasse 9, CH-2540 Grenchen
(Tel.: 032 / 655 27 72 fax: 032 / 655 71 74)
E-mail: etaformation@eta.ch Internet: www.eta.ch



Jack Kurdzionak, CW

From the Workshop

You Are Invited

Do you have a solution to a watch or clock repair problem that you want to share with our membership? Do you have a question about a repair problem you would like to ask? I invite you to participate in this column with your suggestions, questions, and comments. It's easy. Just e-mail me at AWCI<magazine@awci.com> or write using the old standby known as the postal service. You can even fax me at 513-367-1414.

I will do my best to help you help the membership. By sharing your questions and suggestions all of our members can benefit from our combined knowledge and experience. The ideas, tools, techniques and products presented in this column are suggested by the author and contributing members and are not endorsed by any manufacturer, supplier, advertiser or AWCI itself.

If Your Shop Does Not Have a Defined Take-In Procedure, You Should Definitely Consider:

1. Issuing a numbered, dated, and detailed claim check for each item left at your shop, with no exceptions.
2. Carefully examining, in the presence of the customer, each item left at the shop, documenting all visible defects in the item, and including that information on the customer's claim check for the item.
3. Getting complete contact information from the customer leaving an item. That information should include name, address, and telephone, as well as e-mail and cell phone number if applicable.
4. Accepting third party repairs cautiously.
5. Asking customers for a declared value for each item left at your shop.
6. Familiarizing yourself with the laws of your state regarding abandoned items pertaining to your business.
7. Complying with abandoned property laws to protect your business.

Claim Check

The dictionary defines a claim check as "A receipt for property that has been left or deposited." The receipt usually has the depositor's name and contact information as well as a description of the item deposited. When the item is picked up, the claim check is matched to the item to insure that the correct item is delivered to the customer. The concept is simple enough. The claim check is presented, and surrendered to the business holding the item, the item is returned to the person presenting the claim check, payment for services is made, and the transaction is completed.

But, nothing is ever as simple as it seems. Regardless of the reason, some repair shops neglect to give every customer a receipt. The clerk in the shop may know the customer and both clerk and customer assume a claim check is not necessary. The clerk may think he is too busy to issue one. The customer may say he is in a hurry and does not need the receipt. Each of these situations is trouble waiting to happen.

When money is deposited into a bank, a receipt is issued. The receipt identifies the customer, and the amount and nature of the funds in the deposit. When the funds are withdrawn, the bank makes every effort to insure that the recipient of the funds is entitled to receive them. Imagine someone walking into a bank and saying to the teller that he had previously left $100 with a teller;

did not get a receipt and he wanted to withdraw it today? That withdrawal is not going to happen. The bank will not receive funds without issuing a receipt, period! Banks do not care if the person is a regular customer, is in a big hurry, or just going across the street to buy a coffee, a receipt will be issued.

Although repair shops are not banks, shops do receive items of value that are being held for a customer. The shop has responsibility for the care of an item left in its custody and an obligation to return the item to the customer, in the same or better condition than it was received. A properly completed claim check establishes benchmark information for the item left at the shop. It details the nature of the item, its value and condition, customer contact information and the nature of the service to be provided. Using the example of the bank, every customer, without exception, MUST receive a receipt for each item left for repair regardless how well he is known to the shop's staff or how busy the clerk may be. A customer may state he does not need a claim check. That may be OK with him, but he should be politely told that it is REQUIRED by the shop that he be given a claim check and that one will be necessary to collect the item.

Of course, many customers lose or misplace their claim checks and come to pick up their item without one. The shop needs a defensible procedure when returning an item to the customer who does not have a claim check. The person without a claim check has the responsibility to identify himself as the person who left the item he is collecting. The shop's responsibility is to be certain that the proper person collects the correct item. Follow the example of the bank. When the bank is cashing a check, it makes certain the person presenting the check is entitled to cash the check by asking for an ID. The bank also makes sure that sufficient funds are on deposit to cover the check being cashed. The shop has a responsibility to positively identify the customer collecting an item as the person whose name is on the claim check. If the person surrendering the claim check is not the same person who left the item, the shop has the further responsibility to make certain that person is entitled to collect the item. A person with a claim check may not be entitled to claim the item. The claim check may have been lost or stolen, and the actual owner of the item may not even be aware of its loss. Essentially, the shop has the responsibility to return the item to the person who left it with the shop, or to another person authorized to collect it.



CHRONOS

IF YOU LOVE WATCHES, YOU'LL LOVE CHRONOS

❑ $22.50 – One Year
❑ $42.00 – Two Years
❑ $60.00 – Three Years
Foreign subscribers add $10 per year. (U.S. Funds drawn from U.S. bank only)
❑ Check or money order enclosed
❑ Charge my Visa or MasterCard
Card No. _____
Exp. Date _____
Signature _____
Phone _____
Name _____
Address _____
City _____ State _____
Zip _____ Country _____
Company Name _____
Type of Business _____

Chronos Magazine is published 6 times per year for the connoisseur of luxury timepieces. Each issue presents the finest watches and clocks of today as well as exploring premier vintage collections.



WCR
Watch & Clock Review
THE INDUSTRY'S MOST-USED PUBLICATION

❑ $19.50 – One Year
❑ $35.00 – Two Years
❑ $50.00 – Three Years
Foreign subscribers add $10 per year. (U.S. Funds drawn from U.S. bank only)
❑ Check or money order enclosed
❑ Charge my Visa or MasterCard
Card No. _____
Exp. Date _____
Signature _____
Phone _____
Name _____
Address _____
City _____ State _____
Zip _____ Country _____
Company Name _____
Type of Business _____

Watch & Clock Review is published 10 times per year and is the industry's most-used publication–the only one in North America devoted to watches and clocks. Get the one convenient source of industry news features including eight annual directory issues.

SEND TO : SUBSCRIPTION DEPARTMENT 2403 CHAMPA ST. DENVER, CO 80205 CALL US AT 303.296.1600

This writer is aware of a few examples of how proper receipts and procedures prevented unwelcome problems.

Tony brought a woman's 14K gold watch, he said belonged to his girlfriend, to the local watch shop. After it was repaired, Tony brought in his claim check, paid for the repair, and collected the watch a few days before he and his girlfriend left for a winter vacation. While on vacation, Tony suffered a fatal heart attack. This should have been the end of the story, but there were complications. Although Tony had a girlfriend, he was never divorced from his wife who actually owned the gold watch. Somehow, she learned that the local watch shop had repaired her watch just before Tony died. While probating Tony's estate, the widow's attorney made a call to the watch shop to ask about the watch Tony had left for repair. The watchmaker assured him that Tony had brought an item to the shop, it was repaired and Tony presented the claim check and collected the item before his untimely death. Because the watchmaker had a defensible procedure for returning repaired items, this was the end of the story. He did not become involved with Tony's extramarital affairs, but it did cause him to remember William Congreve's famous quote, "Hell hath no fury like a woman scorned."

In another case, Jane came to a clock shop without a claim check to pick up her valuable antique clock she said was left by her son a few weeks earlier. The shop's owner, like the watchmaker mentioned above, always issued claim checks for items left for repair. Since Jane had no claim check, the clockmaker checked his records to search for the clock. He found no record of Jane's clock ever having been received. He had no recollection of a clock of that description being left at the shop nor did he remember Jane's son. He asked Jane to have her son locate the claim check so that he could further research his records. After he made that request, Jane became indignant and flatly stated that her son received no claim check when he left the clock. She immediately accused the shop owner of attempted theft of her clock. The shop owner tried to explain that without a claim check, he could not be of any help in this situation. Jane fumed, fussed, complained, and finally left the shop. Nothing further came of this unpleasantness. Was Jane confused? Was Jane being dishonest? Did her son leave the clock at another nearby shop? The answer may never be known. Without a claim check the customer has the burden to prove he left an item at the shop.

Third party repairs can also be a source of headaches. Let's say that Henry brings a clock to the repair shop on behalf of his Aunt Emma. The clock belongs to Emma and Henry brings it in and receives the claim check. Henry approves the repair, the repair is done, and then the trouble begins. Henry is called to pick up the clock and he says, "Thanks, I'll tell Aunt Emma it is ready." Aunt Emma calls and says, "Keep the clock. I didn't want to spend that much money on its repair. You people overcharge for your repairs anyway. My husband gave me that clock in 1952 and paid much less than you are charging for its repair." Now what does the clockmaker do? Henry said, "OK, fix it," and Aunt Emma says, "Keep it." Henry doesn't own it, but he left it for repair. Emma says she owns it, but won't pay for the repair. Avoid this third party situation by asking the person leaving the clock, "Who will be in charge of the repair and be responsible for approving and paying for it." That person's name and contact information should be put on the claim check and all arrangements are made with the responsible person rather than the courier. By asking the question, "Who is responsible for this repair?" one avoids third party problems in his shop.

Finally, what do you do with unclaimed watches and clocks that have been left in your shop? Many watch and clock makers hold them indefinitely because they don't know what to do with them. The various states have laws regarding the disposal of unclaimed jewelry, watches and clocks, but few shop owners are familiar with their own state laws so they just retain the items hoping that the customer will stop in, pay for the repair, and pick up the item, even after several decades have passed by. Oftentimes, procedures required by state laws regarding abandoned property can be cumbersome; therefore, they should be used only as a last resort. Many shops are now asking for, and receiving, either a sizeable deposit or full payment in advance for repairs. An alternative method for a shop that accepts credit cards is to ask for a credit card number to guarantee payment when repairs are completed. These shops seldom have to utilize the state law to dispose of unclaimed repairs.

Make 2006 the Year That Your Shop:

a. Issues a detailed claim check with complete customer contact information for every item left for repair.
b. Examines all items left for repair for defects as they are accepted.
c. Receives a declared value for all items accepted for repair.
d. Has a policy in place to deal with third party repairs.
e. Takes every care to deliver each item to the proper person.
f. Takes steps to reduce the number of unclaimed items.

Jack Kurdzionak

AWCI Material Search

EDITOR'S NOTE: If you can supply any of the items listed here, please send details to the AWCI Material Search. **Do not send the items to AWCI.** Members requesting these items will be advised of their availability, and will contact you directly.

1E2 Dueber Hampden 16 size, 23 jewel, Serial #3327302, *safety roller bridge model*, #12145 or #4551.

1E4 Patek Phillipe 3285/23, Serial #982036, *movement complete, stem and crown.*

1E5 Seiko, Serial #67305269, *two coils*, #4002-272.

1E6 Bulova 10COAC, *large drive wheel* (with or without notched set wheel), #4G.

1E9 New Haven Clock lantern hub, *fan arbor* (22 - 100th OD, 6 pin).

1E10 Waltham 16 size, 1899 or 1908 model, *hunting movement complete.*

If you can supply any of these items please contact: AWCI Material Search, American Watchmakers-Clockmakers Institute, 701 Enterprise Drive, Harrison, OH 45030-1696. Toll Free: 1-866-367-2924, ext. 305; Phone: (513) 367-9800, Fax: (513) 367-1414 or E-mail: mhuff@awci.com

The American Watchmakers-Clockmakers Institute maintains this unique member service to assist professionals in replacing hard-to-find parts for vintage timepieces. There is a fee of $10.00 for each search.

The AWCI Material Search first contacts several dozen material houses and outlets on behalf of the member to determine if the missing part is available from any commercial source in the United States or Canada. If the part cannot be found, the search will be listed in the *Horological Times*.

AWCI Member Websites

- **Have you always wanted a website for your business, or are you unhappy with your current website?**
- **Do you feel that your business needs more exposure to your customers?**
- **Do you want a website, but don't know where to start, and assume it would be a costly venture?**
- **Do you just not have the time to mess with it?**

Go to

awci.companysitecreator.com

AWCI and Companysitecreator have worked together to offer an opportunity to all members!

It literally takes just a few minutes to build your new site in 5 simple steps from start to finish.

Two packages are offered ($8.95 per month or $18.95 per month), and you are able to see your site before you decide to purchase.



Laurie Penman

Correction to Adjusting Mass-Produced Pallets

Part 2 (January 2006, page 36)

I have abject apologies to make for a gross error in Part Two.

Figure 9 used a drawing of the actual dimensions of the blank verge that was available and in "offering this up" to the drawing I placed it wrongly. Since I then used copies of this drawing from then on, the errors multiplied. Here, with my repeated and sincere apologies, is the corrected version of pages 38-41 of the article.

Figure 9 shows the pallet being "offered" to the wheel. There is a practical consideration here; to offer the pallets so that the interaction of the filed surfaces and the wheel teeth can be seen, the new verge needs to be fitted temporarily onto its arbor so that it slides past the wheel (when the pallets are finished, the verge can be moved into its operating position and locked there). The figure shows the height (center distance) adjusted so that the existing outer curves pass through the center points of two tooth spaces when the teeth of the wheel are balanced evenly about the vertical center line.

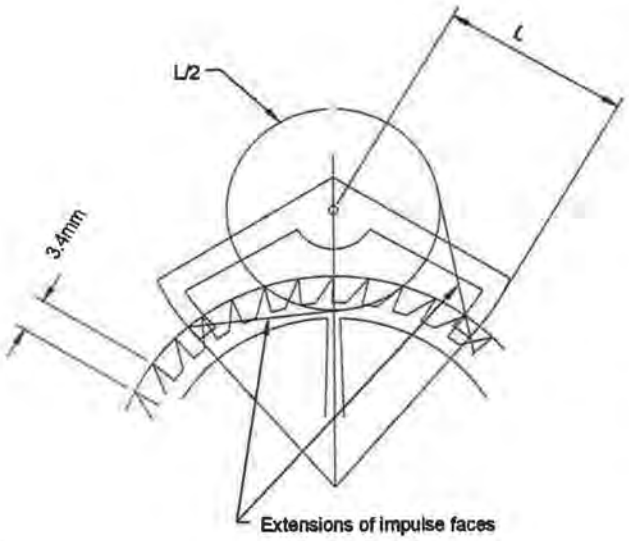

Figure 9

The center distance would also be correct if the inner curves touched the tips of escape wheel teeth, but the verge would be closer to the wheel (and depart further from the 'square' conformation) and the existing outside curves were better made anyway, leaving a lesser amount of work to do.

Within the range of curves that it is possible to file on the verge blank, there is a range of correct center distance, one for each pair of curves. However, the pallets themselves have a limited length and there will be center distances and curves that just will not fit into the available metal of the verge blank; that is why we "try" the filed verge against the wheel.

In fact the amount removed from the outside curves of the pallets leaves sufficient length for accepting the impulse faces. This is checked by making an approximation for the angle of the impulse faces. By drawing a circle around the arbor center that is equal to half the length of the verge arm (which is the radius of the outer curve), we can draw tangents to cut the pallets. The angle produced is close to being the correct angle to give an escapement lift, or swing of 20. I believe it can be seen that the

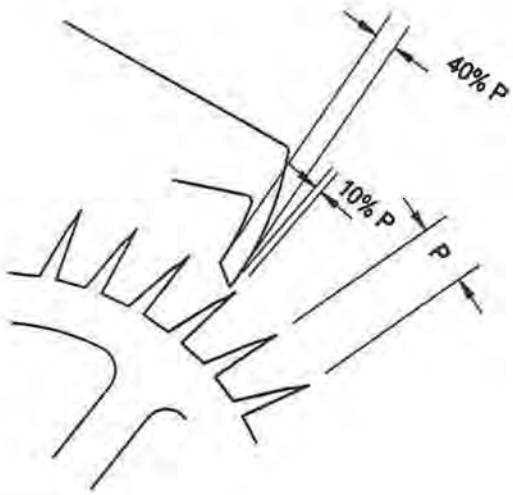

Figure 10

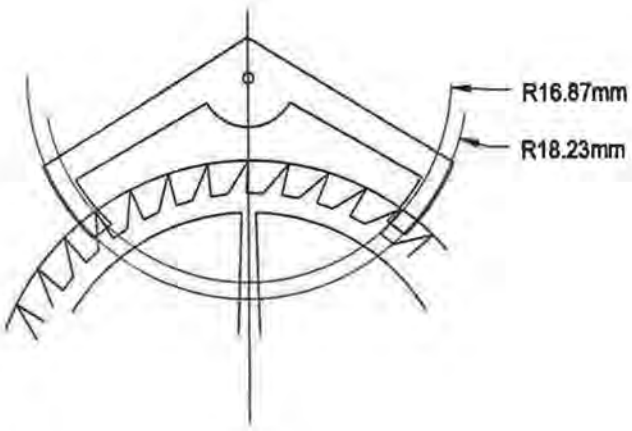

Figure 11

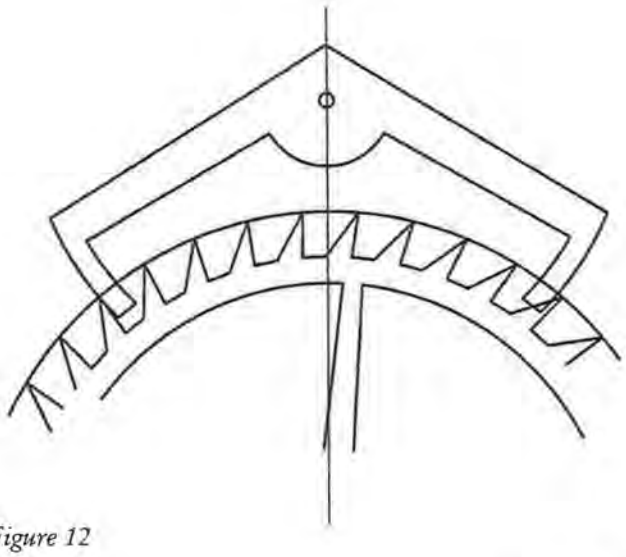

Figure 12

surface produced by these tangents, will allow for lock and a sharp intersection of the working surfaces of the pallets—inner curves, outer curves and impulse faces. Since the pallets still have had nothing removed to produce the inner curves, the center distance shown appears to be correct; once this is accepted, there is no need to change the center distance, nor the outer curves.

The next adjustment is to the thickness of the pallets, which means establishing the inner curve radius.

Figure 10 repeats the specification of pallet width that we saw in Part 1 (Figure 2); the thickness of the pallets should be 40% of the tooth pitch and the drop should be 10%. The measurement of the pitch is 3.4 mm and as the tooth tips are pretty sharp, so there is no need to make allowance for a flat on the tips. Pallet thickness is 40% of 3.4 mm (1.36 mm) and the drop is 0.34 mm. Since the drop is to be shared between each pallet, 0.17 mm should be subtracted from the outer radius and added to the inner one. The outer radius becomes 18.4 - .17 = 18.23 mm and the inner radius 1.36 mm less than this figure = 16.87 mm (Figure 11).

The calipers are used to scribe an arc of 17.04 mm on the pallets (Figure 11) and the inner curve is filed to match the line. There is no point in finishing these surfaces (or the outer curves) as yet; that can wait until the impulse faces have been defined and then all the working surfaces should be brought to a fine finish with smoothing files and very fine emery paper.

In Figure 12 the inner curves have been filed out and all that remains is to make the impulse faces. The drop can be seen on the exit side, and if the wheel is rotated half a tooth space, a similar drop appears on the entry (Figure 13).

This particular set of pallets form part of a "square" escapement (it was made to span an included angle of

HERMLE • KIENINGER • URGOS
H. HERR • REGULA
from
Butterworth Clocks, Inc.
Why repair when you can replace?
THE LARGEST MOVEMENT SUPPLY IN THE WORLD
FREE PRICE LIST:
Call toll free: 1-800-258-5418
5300 59th Ave. W • Muscatine, IA 52761
E-mail: bci@muscanet.com • Web: www.butterworthclocks.com
SAME DAY SHIPPING • TWO-YEAR WARRANTY
Mark Butterworth

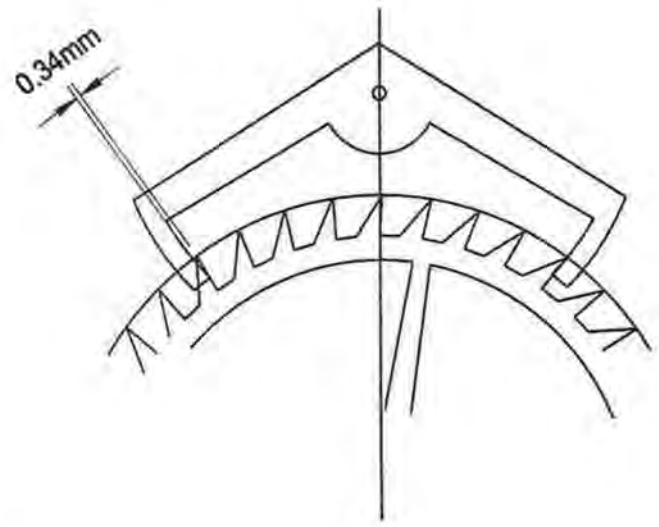

Figure 13

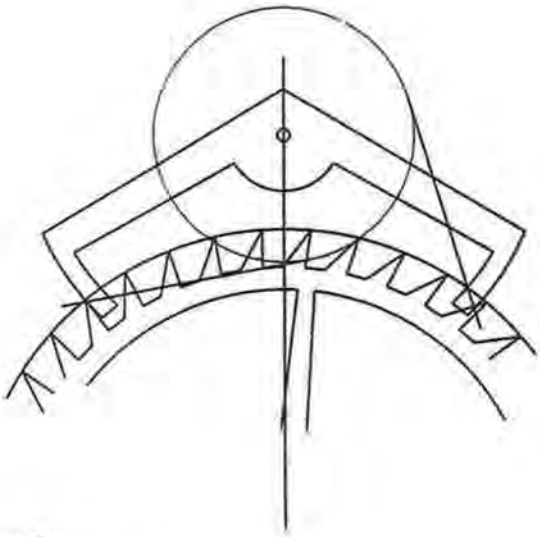

Figure 14

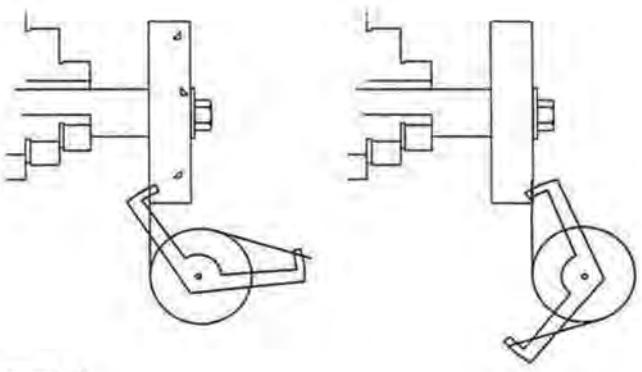

Figure 15

90° evenly balanced around the center line) and if we describe a circle about the center of the verge arbor that has a radius equal to half the length of the arm it can be used to produce a close approximation to the required swing angle i.e., the angular motion needed to release one tooth of the escape wheel and lock on the other.

Defining the Impulse Angles

The width of the pallets is too small to easily measure with a protractor and so we grind or file it by making the surfaces part of a tangent to a circle, or sometimes, two circles. The idea being that if you know that a line extended from the face makes a tangent to a given circle, that circle can be positioned so that the cutting surface of file, or grindstone lies on the tangent and the impulse face will cut at the same angle.

The circle is shown in Figure 14 and the tangents that are drawn to it to define the impulse face angles. The circle is used as a guide only and the simplest way of making use of it is to fasten the verge to a plate that can be held in position against a grinding wheel (Figure 15). I have shown the grinding wheel held in the chuck of a lathe, but it can be managed with a simple grinding machine and clamps, but not as conveniently. The verge is swung into contact with the stone by hand and metal removed until the verge is almost working when tried against the escape wheel. At that point all surfaces are polished, coated with a surface protection against scaling (soap laid on thickly will do). Then a final light touch is made to finish the impulse faces, without heating up and ruining the hardening. Notice that the only thing that is controlled by this setup, is the angle of the impulse faces, it is up to the operator to reduce the lengths of the pallets in a balanced fashion—and to do so, so that the correct amount of lock is achieved after final grinding.

Next month I will show just how close to "correct" this means of marking the circle (called a reference circle) is, and what can be done to correct matters if the amount of lock differs from one pallet to the other because of errors in the impulse angle. Making the verge on the lathe, the bending of verges, and the half deadbeat, accurate measurement of swing, and other matters.

2006 AWCI Annual Convention & Educational Symposium

August 3-6

Join us at the Marriott Seattle Sea-Tac Airport Hotel for the annual AWCI meetings and educational symposium



Hotel Information:
Room Rate $105
Marriott Seattle Sea-Tac Airport
3201 South 176th St. - Seattle, Washington 98188
Phone: (800) 228-9290 or (206) 241-2000
Fax: (206) 248-0789
www.seattlemarriottseatac.com

2006 AWCI Educational Symposium:

Clock Presenters:
Brien Dews - Electric Clocks and the Telechron Company
Bob Macomber - Bushing Wooden Clock Movements
Vince Schrader & Jerry Faier - AWCI Certification

Watch Presenters:
Anthoine Simonin, Watchmakers of Switzerland Technology & Education Program (WOSTEP)
Ed Euberal - Railroad Pocket Watches
Manuel Yazijian - The Professional Watchmaker Behaviors, Practices and Certification



New – New – New

Insurance for Your Watch & Clock Inventory!

AWCI has partnered with Intercorp, Inc., to offer a Horologics Insurance Program for Dealers and Collectors .

- *Coverage for your inventory on premises or stored in a bank vault, at shows and expositions, and in transit.*
- *State-of-the-art online program (www.shipandinsure.com) provides coverage for package shipments via Federal Express, United Parcel, and the Postal Service. Discounts on shipping rates up to 40% when you use FedEx.*

No two dealers or collectors are alike, so coverage can be tailored to your specific needs.

For more information, call Intercorp at 800.640.7601, or download the application form from the AWCI web site at www.awi-net.org.

intercorp INC.
Insurance Program Managers

1438-F West Main Street, Ephrata, PA 17522-1345 • Phone: 717.721.3500 • Fax: 717.721.3515



Laurie Penman

The Deadbeat Escapement

Part 3

Finishing Pallets by Lathe

I have assumed that the work done on pallet blanks in Part 2 was all hand work, using files. However, a lathe will produce more precise surfaces for the pallets. It is relatively easy to produce the outer curves on the verge's pallets using a lathe, and more difficult to make the inner ones, but the latter is possible and the results more accurately conform to a true arc than filing. It is also faster, but for both inside and outside curves a simple holding device is needed.

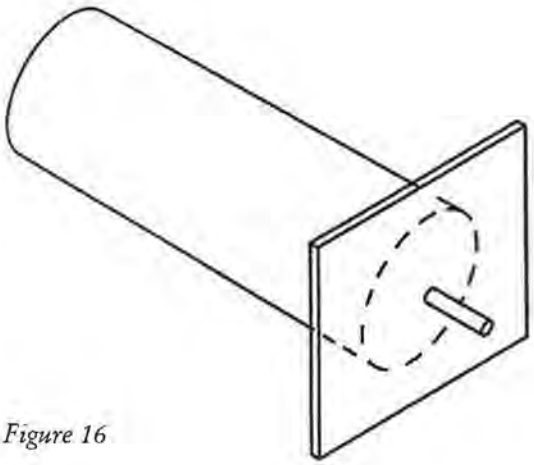

Figure 16

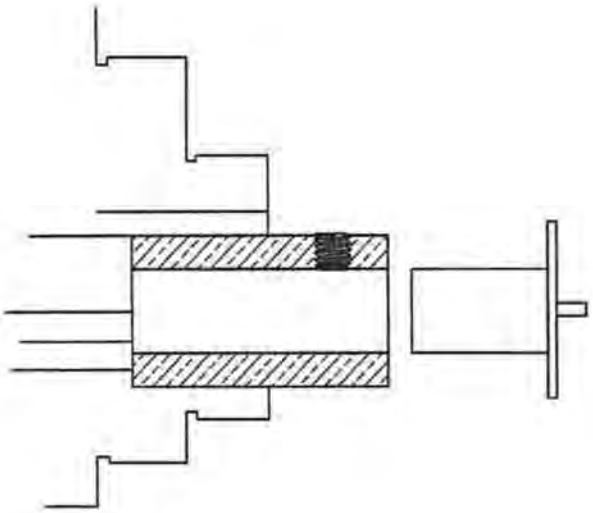

Figure 17

Holding Device

Figure 16 shows a short piece of bright steel (either bright drawn mild steel, or drill rod) that has had one end faced square to the axis and a brass plate silver soldered onto it. The reason for choosing bright steel is that it avoids the need to machine it to a true, non-tapered cylinder. Rusty stock that has been polished up again is not really good enough. If the three jaw chuck will reliably hold and spin cylinders within 0.002" (0.05 mm), no more needs to be done before arranging the holding pieces (for the blank verge) on the plate, but if the chuck is less reliable than this a large collet has to be made, because the work will be shifted in the chuck during machining and the arcs of the pallets have to be accurately centered on the axis of the machine. The collet is very simple too (Figure 17) consisting of a piece of brass rod that has been bored out to be a slide fit on the bright bar and, without taking it out of the chuck, drilled and tapped for a locking screw. (Make sure that the wall thickness is sturdy enough to resist crushing, 5 mm wall thickness should do this, and provide enough thread for a locking screw). This is a very accurate means of maintaining "truth" and controlling the rotation of the work around the lathe axis, but it will lose its effectiveness when removed from the chuck, so don't bother to make a nice job of it.

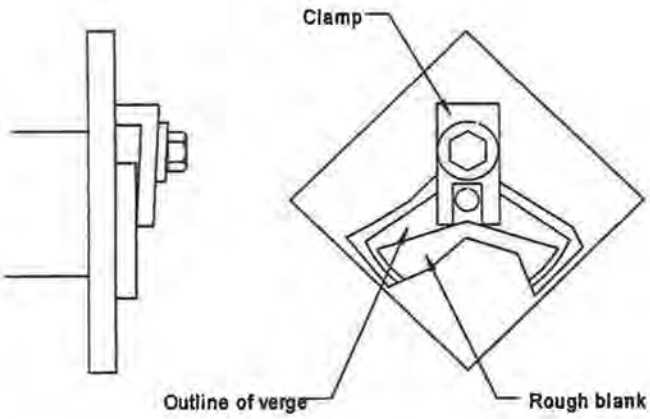

Figure 18

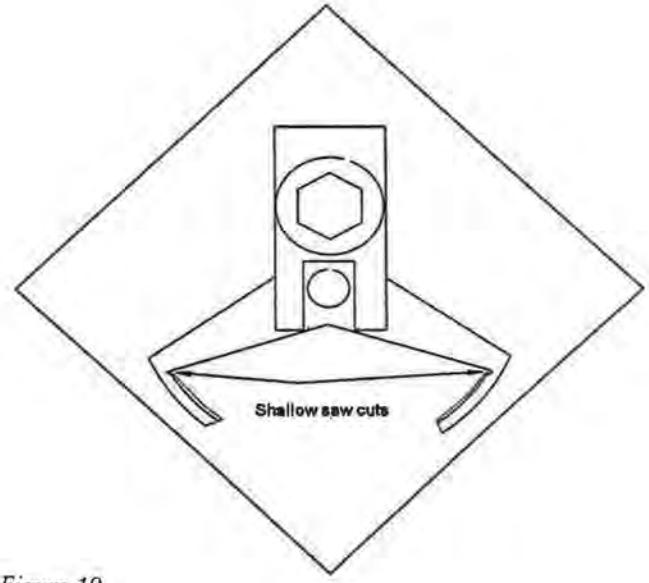

Figure 19

When the collet is made and fitted with a locking screw (remove any tapping burr from the bore), slide the bright bar into it and lock the screw; take facing cuts across the plate until the surface is flat and spinning at right angles to the axis of the lathe.

Choose a drill size that is smaller than or equal to the verge arbor and use it to drill the plate and the verge blank. If you have blue pivot wire that is close to this dimension, use a drill bit that will produce a close slide fit between the wire and the holes. Otherwise, a piece of drill rod that has been turned to the required diameter must be fitted into the hole and held in with Loctite, or similar. Figure 16 shows this rod in position, where it will locate the verge in the correct position. It is only a locator; a small clamp is also needed, so that the blank can be held immovably against the surface of the plate (Figure 18).

Position the blank on the plate and clamp it solidly, placing the clamp where it cannot strike the turning tool when the outside curve is machined. The tool will be making an interrupted cut because the blank does not have a continuous periphery, for this reason the tip of the tool should have a small chamfer; a sharp point such as that used for pivot turning, will break away and produce a rough surface. The cutting speed of the metal should be as fast as can be maintained without burning the tool tip. This will be about 80 to 90 feet per minute. If the blank has a maximum radius to the machined surface of 0.75" the periphery of the circle swept out by the rotating metal is 1.5" x 3.142 (approximation for pi) = 4.713".

Eighty feet per second, when divided by 4.713" gives just over 200 rpm (revolutions per minute). Normally I do not bother about quoting speeds, but in this instance you will get a better finish if the work piece has plenty of momentum. Polish with emery paper on a flat piece of plastic or an emery stick, and be careful not to rap your knuckles, it is an interrupted polish as well as an interrupted cut. As I said at the beginning, turning the outside curve is simple, the inside curve requires a different approach.

Remove the blank from the holding device and mark the inside curves and the lengths of the pallets. Now remove as much of the waste metal as possible with a saw and file, without encroaching on the inside curved surfaces. A shallow saw cut in the inside corner, which is a little deeper than the curve to be produced, will be helpful when machining the inner surface. The length of the pallets do not need to be cut so closely, in fact as much as an eighth of inch longer than necessary will allow for the uneven surface that will result at the place where the tool begins to machine the inner surface. See Figure 19 for these details.

Place the work back in the holder, located by the pivot wire at the center, and clamped so that the lathe tool can be used to machine the inside of one of the pallets. This is to be a hand operation, but you will be using the lathe tool to obtain a smooth arc centered on the pivot wire. You will need a boring tool, and a bar of brass to act as a stop for the rotation of the chuck. This bar will be long enough to be struck by the side of one of the chuck jaws when it has swung to the horizontal, and stout enough to be stable when stood on the lathe bed.

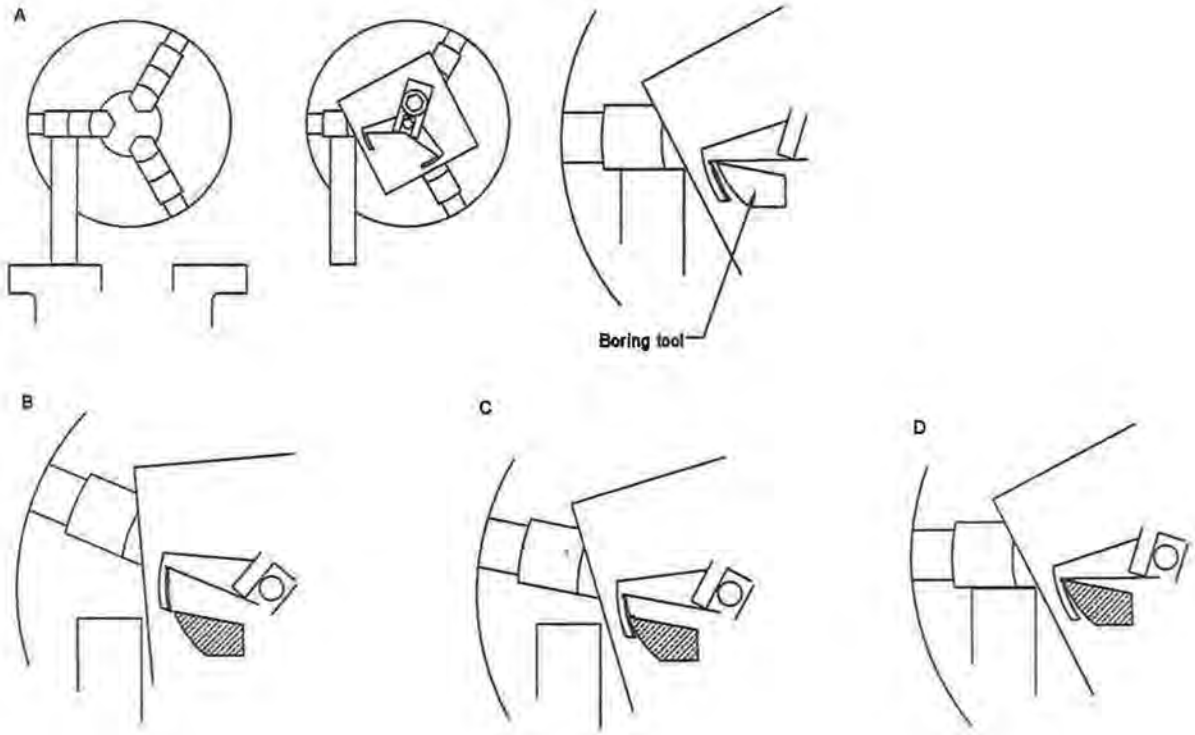

Figure 20

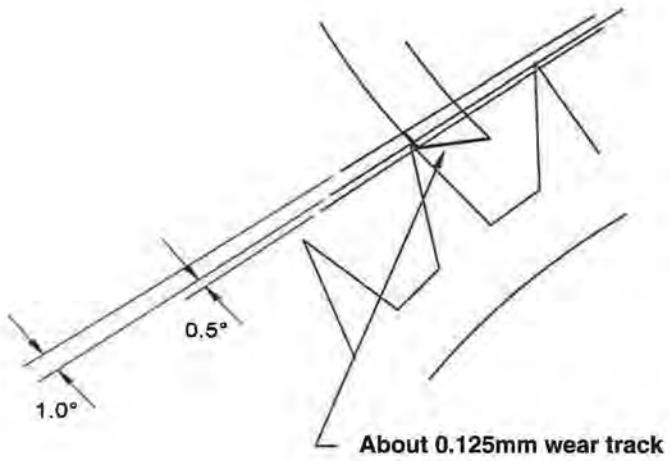

Figure 21

Slacken off the chuck, or the collet, so that the holder can be rotated and then rest one chuck jaw on the stop. Position the verge blank so that the point of the boring tool is level with the saw cut and will just break into it when the chuck, or collet, is tightened again. Now swing the chuck away from the stop, make sure the blank is just above the tip of the tool and adjust the latter until it will make a shallow cut (0.005") when the chuck is swung back against the stop. After each cut the tool is advanced through the blank using the saddle, or the top slide. Figure 20 details the operation. The job is not fast, but it is accurate and less time consuming than filing.

At Figure 20A the set up of the chuck and the stop bar is shown, and then the blank mounted on the holding device and the boring tool. In 20B the chuck has been rotated by hand until the tool can be advanced to make a small cut; Figure 20C shows the cut being made. This is repeated as described above until at 20D the last cut is made and the inner curve is finished. Since the blank is turned over to machine the other inside curve there is no difference to the machining operation.

Determining the lock and the angle of the lifting face (impulse face) is the same as described for the totally hand operation, described last month.

Bending Solid Pallets

Although this article is entitled "Adjustment ...", so far I have only dealt with making replacement verges from a blank. The reason is that if a solid verge is worn, the only adjustments than can be made (stoning the impules and locking surfaces, or bending the pallet arms) alter the original geometry of the escapement, and can result in the verge being no longer a true deadbeat.

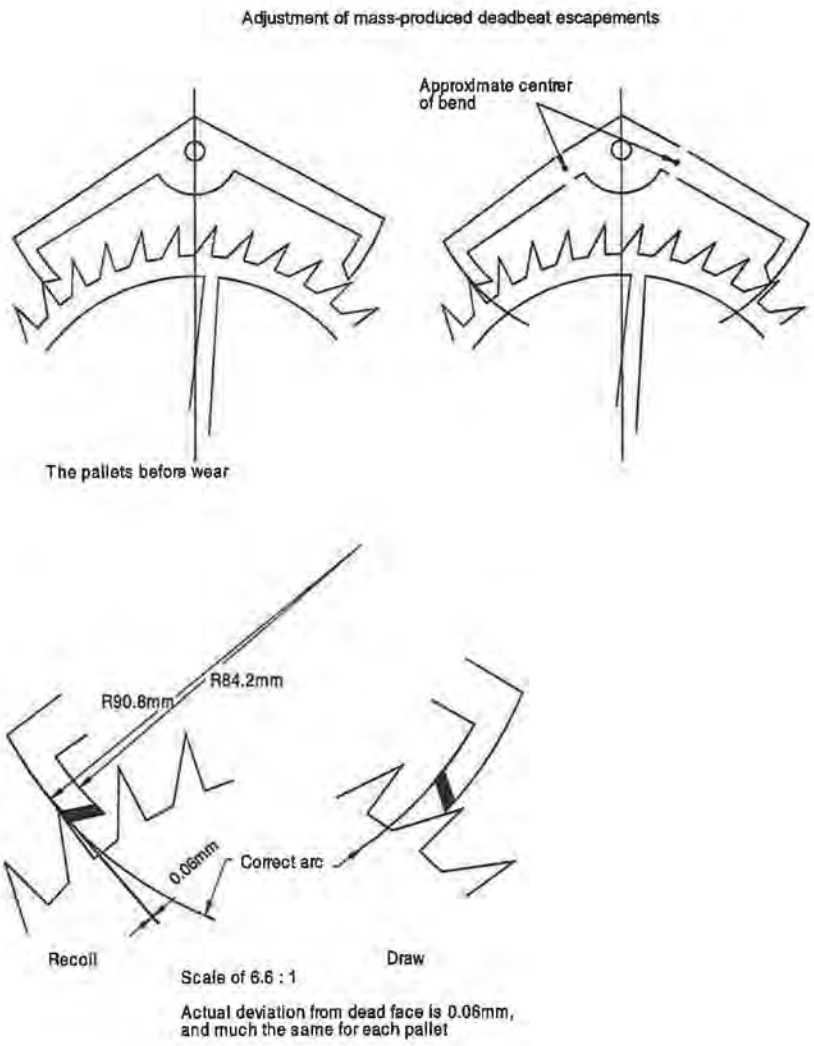

Figure 22

My feeling is that a solid verge was used on the better quality of mass-produced clocks and since the manufacturer made them as deadbeat, they should be kept that way. However, it can be argued that the degree that the adjustment changes the escapement is small and has little effect on timekeeping. (These clocks are not precision clocks, and usually are only accurate to one minute a week at the best). So let us look at the effects of adjustment on solid verges.

The amount of wear on the pallets, which is likely to happen before the clock stops and will not 'go' unless more power is added, is quite small. As a guess, I would say about 0.005". This wear results in rounding the junction of dead face and impulse face and puts the escapement into recoil, (Figure 21). All that is needed then, is to bend the pallets sufficiently to allow these faces to be ground clean again.

Supplementary arc, (the amount of swing in excess of what is demanded by the escapement to allow the escape wheel to rotate) should not be greater than the impulse swing unless it is strongly over driven by the wrong mainspring, or over weighted. Therefore, I have used a supplementary arc of 10 and an impulse swing of 20 (semi arc of 10) in Figure 21. The greatest wear (a small pit) appears where the escape wheel teeth make their first contact with the dead faces—the locking position— and since lock is often taken to be 1/20, I have used this to show the position of the pit. Figure 22 shows the pallet arms bent through about 11/20 to allow the worn part of the pallet (solid shading) to be ground away.

The result, so far as I am concerned, is surprising. So long as the task is carried out carefully and the point of bending confined to the area indicated, there is very little deviation from the true dead face. As measured on the drawing it amounts to 0.06 mm of recoil on the entry side and 0.06 mm of draw on the exit side. This is so little that I cannot (now) believe that the operation would affect the original timekeeping significantly on a mass-produced movement. Years ago I would have had to draw this out to a scale of about 40:1 to make sure of this, a computer and CAD makes the job so much easier, and precise.

AWCI PARTS MESSAGE BOARD

The American Watchmakers-Clockmakers Institute **Parts Message Board** is available on line at **www.awci.com** Click on the Parts Forum in the Top Links box. Guests are free to browse our topics and posts but only validated AWCI members will be able to actively post messages and communicate with one another via private messaging.

The purpose of this board is to aid our members in finding watch parts, clock parts and tools. This board is not open to generic advertising posts; therefore, web addresses and e-mail addresses should not be included in public messages.

AWCI EVENING CLASSES IN CLOCK AND WATCH REPAIR

American Watchmakers-Clockmakers Institute is offering weekly evening classes (10 consecutive Wednesdays) in clock and watch repair. These will be basic instructional classes, loosely structured to adapt to the needs of the students. Watch and clock classes will run simultaneously on Wednesday evenings from 6:00 PM to 9:00 PM at the training facilities at AWCI in Harrison, Ohio.

Instructors:	Laurie Penman, Clock Repair Tom Schomaker, CMW, Watch Repair
Schedule:	Spring Session - April 5, 2006 - June 7, 2006 Summer Session - June 28, 2006 - August 30, 2006 Fall Session - September 20, 2006 - November 22, 2006 Winter Session - January 10, 2007 - March 14, 2007
Location:	AWCI Training Facility 701 Enterprise Drive, Harrison, OH 45030
Cost:	$400 per 10-week session Registrants must be AWCI members ($83 yearly membership) Tool and material costs are extra

For more information or to register for a class, contact Nancy Wellmann, Education Coordinator 1-866-367-2924, ext. 303 or e-mail: *nwellmann@awci.com*



Payment processing tailored to your needs,
a partnership with AWCI,
and reduced rates just for members.

And you thought your timepieces were reliable.

First National Merchant Solutions can provide your business with an affordable way to accept credit and debit payments, convert checks to instant cash, and receive payments over the internet. Just some of the ways we can help you grow your business...find out more today.

800-354-3988 **www.membersales.com/awci-net**

First National Merchant Solutions

New Members

Alabama
Rolison, Joy—Eight Mile, AL

California
Hahn, Bruce M.—Walnut Creek, CA
Lyon, Rebecca—Los Angeles, CA
Rick, Norbert H.—Chula Vista, CA*
Sutherland, John B.—Milpitas, CA

Colorado
Miller, Mark L.—Pueblo, CO

Connecticut
Tolnay, Arpad—Naughtuck, CT*

Florida
Geleski, John F.—Clearwater, FL*
Lopez, Yuri—Miami, FL

Illinois
Albrecht, Jason—Monmouth, IL
Beers, Michael—Elmhurst, IL
Calderon, Lorenzo—Chicago, IL
Lee, Patrick—Carbondale, IL
MacKenzie, Brian D.—Chatham, IL

Michigan
Dewicki, Terrance—Dearborn Heights, MI
Foutris, Theophanis—Sterling Heights, MI

Minnesota
Hoffer, Matthew C.—Circle Pines, MN
Luey, John R.—Saint Paul, MN
Schipani, Ray—Minneapolis, MN

Mississippi
Davenport, Joseph M.—Hattiesburg, MS
Green, Jessie—Petal, MS
Hahn, Summer—Hattiesburg, MS
Kay, Joseph—Soso, MS*
Miller, John—Petal, MS*

Missouri
Freeman, Richard M.—St. Louis, MO

New Hampshire
Adams, Richard E.—Londonderry, NH*

New Jersey
Almaier, John—Sicklerville, NJ*

New York
Schaffer, William—Oneonta, NY

Ohio
Collins, Robert—Medina, OH
Glauser, Joan—Toledo, OH
Klonowski, Nick—Garrettsville, OH
Pierce, C. David—Gambier, OH*

Oklahoma
Myers, Lora—Stillwater, OK
Perkins, Christopher—Okmulgee, OK

Pennsylvania
Kobold, Michael—Pittsburgh, PA

Puerto Rico
Tirado, Nelson Moreno—Aguadilla, PR

Texas
Rehill, Kevin—Houston, TX
Shans, Robert V.—Fredericksburg, TX
Vogt, Peter A.—Paris, TX

Washington
Rojas, Jose M. Villar—Seattle, WA

Wisconsin
Hays, John Marshall—Racine, WI*

***AWCI welcomes back these individuals who have chosen to re-instate their membership.**



Zantech's compressor system has a unique dual trigger action that is capable of spraying dry filtered air, as well as PlastiCLEAN™ Solvent. Safely dissolve dry oils and other contaminants (without disassembly of the gear train), all with the ease of a foot switch activated system that is quiet enough for a retail environment. The cost of cleaning one movement with the Zantech compressor system averages only 10 cents per movement!

Kit includes:

- **Dual-Action Spray Gun**
- **Qt. PlastiCLEAN™ solvent**
- **2 oz and 3/4 oz Jar with cover**
- **Pair Movement Grippers**
- **Airbrush Holder**
- **Compressor Air-Hose**
- **In-line Moisture Filter**

30.650C (Quiet Compressor & AC foot Switch Included) $699.95



Simply the best cleaning solution for quartz watch movements

13 fl oz Aerosol Can $16.95
1 qt Bulk Liquid $24.95

ZANTECH® INC.
Quartz Watch Supply Specialists Since 1976

7501 N. Harker Dr.
Peoria, Illinois 61615
Orders only: 800-441-7569
Fax: 309-692-8375
E-mail: orders@zantechinc.com
www.zantechinc.com

BULLETIN BOARD

ITEMS STILL NEEDED

Sir Francis Drake Falling Ball Clock
Gordon Beach, Yuma, AZ, is looking for technical/parts information for a Sir Francis Drake Falling Ball Clock, 1981, made in England.

Levin's Pivot Polisher & Straightener
George Davis, Richland, WA, is looking for a copy of the parts list and user manual for Levin's pivot polisher and straightener Cat. #P500.

Swartchild Friction Jewel Assortment #49004JF
David Pierce, Gambier, OH, is seeking a copy of a chart for the Swartchild friction jewel assortment #49004JF.

Do you have information regarding this month's requests? Do you need information about one of this month's responses? If so, send your information or requests to:

Horological Times Bulletin Board
701 Enterprise Drive
Harrison, OH 45030-1696
Toll-Free: 1-866-367-2924, ext. 307
Phone: (513) 367-9800
Fax: (513) 367-1414
E-mail: dbaas@awci.com

American Watchmakers-Clockmakers Institute

is now offering to members Health & Benefits Solution Programs

Utilize the buying power of AWCI

- Health Insurance-Individual & Group
- Long-Term Care Insurance-up to 15% Savings
- Life Insurance-up to 30% Savings
- Disability Income
- Critical Illness
- Cancer Policy & Accident Policy

Plans not available in all states. Plans may vary by state.

Receive enhanced insurance benefits for yourself, your family, or your employees (both full and part-time)!

Contact us now for a free consultation:
AWCI Health & Benefit Solutions Programs
6319 W. 110th Street Overland Park, KS 66211
call us at **888-450-3040** or **913-341-2868**
or visit us at **www.associationpros.com** Search 'AWI'
or email us at **help @associationpros.com**

The

American Watch Guild

announces

the creation of the



International Watch Collectors Society

The **Society** will provide its members with the following

- Calendar of major watch sales & auctions.
  Antiquorum, Christie's, Phillips & Sotheby's
  The previews of upcoming auctions.
  Reports: photographs, prices and auction results.
- Announcements from significant watch firms of new releases and limited editions.
- Information about emerging new master watchmakers and their creations
- Establishment of regional chapters where the collectors can meet and have guest speakers from noteworthy watchmaking factories.
- Question and Answer service by Stewart Unger, noted watch authority & author.
- Annual meeting at the Concours d'Elegance at the summer Jewelers of America Show held at the Javits Center in New York.
- A book club.
- Plus Free Booklets: *How to Buy a Watch (and its Functions)*
  The Care and Service of Timepieces
  Where to Find the World's Finest Watches
  How to Detect a Counterfeit Watch

Membership	1 year - $65	2 years - $120	6 Issues of Collectors Corner per year Invitation to the Concours d'Elegance
Master Collector	1 year - $120	2 years - $220	the above plus: 10% discount from the Book Club Rebate coupons from Manufacturers

Membership Application Name_____ Phone_____

Address_____ City_____ State_____ Zip:_____

Make check payable to: **International Watch Collectors Society, LLC**

244 Madison Ave., #258 New York, NY 10016 • Fax: 516-374-5060

Classified Advertising

Regulations & Rates

Ads are payable in advance 90¢ per word, $1.00 per word in **bold** type. Classified display ads are $40.00 per column inch, 2¼" wide. Classified ads are not commissionable or discountable. Payment can be made by check, VISA, MasterCard, Discover, Diner's or American Express. The publisher may, at the publisher's sole discretion and for any reason and without notice, decline to publish or republish any ad, in which case any fees submitted or paid for such ads shall be returned or rebated to the advertiser. The publisher reserves the right to edit all copy. Price lists of services will not be accepted. Confidential ads are $10.00 additional for postage and handling. The first of the month is issue date. Copy must be received 30 days in advance (April issue closes for copy on March 1st).

HOROLOGICAL TIMES
701 Enterprise Drive
Harrison, OH 45030
Toll Free 1-866-367-2924, ext. 307
Phone (513) 367-9800
Fax (513) 367-1414
E-mail: dbaas@awci.com
www.awci.com

TRADESMAN

VINTAGE POCKET WATCH RESTORATION. Twenty-eight years experience, guarantee, free estimates. The Escapement, P.O. Box 522, Pooler, GA 31322; (912) 330-0866

DIAL REFINISHING



BEFORE AFTER

Quartz Conversions
Diamond Dial Conversions
Emblem & Name Personalization

Write for Brochures
INTERNATIONAL DIAL CO., INC.
58 W. SUGARTREE
P.O. BOX 970
WILMINGTON, OH 45177
(937) 382-4535

ELECTRONIC INSTRUMENT SERVICE
We are Factory Authorized Service for:
• **VIBROGRAF & PORTESCAP**
• **TICK-O-PRINT & L&R**
We service all makes of ultrasonics, all makes of watch rate recorders, and related equipment. 25 years experience.
190 Deepstone Drive San Rafael, CA 94903
Used Equipment Bought & Sold
VISA **For Information** MasterCard
(415) 453-9266

FENDLEY & COX
WHEEL AND PINION SPECIALIST
1530 Etain Rd., Irving, TX 75060
RICHARD COX 972-986-7698
CMC, FNAWCC, CMBHI
www.fendley-cox.com

CLOCK GEARS, BARRELS and **PINIONS** made from your sample, **ARBORS** re-pivoted, teeth replaced in gears or barrels. All work guaranteed, fair prices fast turn around. Call Mike Loebbaka, 86 Mullens Lane, Saugerties, NY 12477; Phone: 800-411-4542, tictoc@oldandnew.com

DIAL REFINISHING CO. FAST SERVICE, FINEST QUALITY, quantity works welcome. Specialize on changing dial feet positions to fit the quartz movement. Send your works to: **KIRK DIAL OF SEATTLE,** 4th & Pike Bldg., Suite 625, Seattle, WA 98101; (206) 623-2452.

REPIVOTING - WRIST & POCKET WATCHES
Custom made pivots for balance staffs, arbors, pinions. No part too small. Balance staffs and arbors made to factory standards. 40 years experience. Juliusz Dabrowski, (415) 397-0310, jd@jdwatchworks.com

HAMILTON ELECTRIC WATCH REPAIR
Expert, experienced service on all Hamilton 500 and 505 Electric watches. Hamilton electric watches and parts always wanted. René Rondeau, P.O. Box 391, Corte Madera, CA 94976. Tel: (415) 924-6534. E-mail: rene@hamiltonwristwatch.com

TRADE WATCH REPAIR
Same location since 1994. 30 years experience. Reliable, fast service. **Central State Watch Services**, 4820 W. 24th St., Lawrence, KS 66047 (785) 749-4632, sevenstar80@hotmail.com

POCKET WATCH & MARINE CHRONOMETER REPAIR
General repair and restoration of antique and complicated watches. Custom parts fabrication including staffs, verge staffs, stems, levers, and springs. Located in Massachusetts. Matt Henning, CW (413) 549-1950; www.henningwatches.com

CLOCK, MUSIC BOX MAINSPRINGS, GEAR PINION CUTTERS, MATERIAL & PARTS CUSTOM MADE. **TANI** ENGINEERING, 1852 St. Rt. 44, Atwater, OH 44201; (330) 325-0645. Catalog $3.00.

DENNIS KAYE
108 Corgy Drive • Cary, NC 27513
888-363-9510
Porcelain Dial Restoration
Watch • Pocket Watch • Clock
Platform Escapement Repair
Atmos Parts & Service
400-Day Clock Repair
Kundo Coil/Electric Clock Service
Prompt Reliable Service . . . Guaranteed
Call Us or Visit dialrepair.com

MORGAN PIVOT POLISHER
POLISH PIVOTS IN AS LITTLE AS 5-7 SEC.
FITS SHERLINE, MOST WATCHMAKERS & ENGINE LATHES.

MORGAN CLOCK CO.
800-805-2220 9-5 CST
MORGANPIVOTPOLISHER.COM

ATMOS by Jaeger-LeCoultre
Completely overhauled with the longest labor warranty on the planet!
Five years on all labor!
Mike's Clock Clinic
Established in 1982 & devoted exclusively to the Atmos since 1990.
I also overhaul 400-day clocks.
Please call **877-286-6762**
http://www.atmos-man.com/atmos.html

CLEANING, RESTORATION, PART MANUFACTURING FOR ALL TYPES OF CLOCKS & WATCHES
We service and restore all types and grades of watches and clocks-JLecoultre's Atmos- Patek Phillipe- Piguet- Vacheron Constantin- Rolex (certificate # 0168) Omega- Accutron-tuning forks- electric-quartz-fuzzes-alarms-minute repeaters- chronographs- chronometers-any complications- pendant watches- pocket watches- antique or new- cuckoo clocks- 400-day electronic and quartz - we retrofit modernize watches to quartz or mechanical-repivoting-stem manufacturing, (regular or oversize) free estimates, 30 years in watch and clocks restoration and parts manufacturing.
GCA LA PRECISION
Guido C. Alave
Member AWI, NAWCC
3830 Parkland Dr.
Fairfax, VA 22033
Phone 703-352-8793
Cell 703-627-4054
Fax 703-352-8077

ARTICLES FOR SALE

SHERLINE PRODUCTS
Free catalogs upon request
Limited Supply on Hand of Accessories at Old Prices
Starrett Collets Now Available
ANTIQUE CLOCKWORKS, LTD.
P.O. Box 201, Loretto, MN 55357
Toll Free 877-643-7698
E-mail: info@AntiqueClockworksLtd.com
www.AntiqueClockworksLtd.com

ARTICLES FOR SALE

Ceres Moissanite Checker; Presidium Diamond Tester; Kagan Ring Sizer; assortments of gold filled, sterling & 14 kt gold findings; two GS 4-ft. crystal cabinets loaded with crystals, foot pedal model. Ted Cuyler, 1900 Edison, Brush, CO; (970) 842-5816

HAMILTON ORIGINAL MILITARY MATERIAL
Supplying original factory material for the Hamilton Model 21 Chronometer, Model 22 Deck Watch & Military 16 Size Watch Models 23, 3992B, 4992B and 2974B As well as much material for the 950B & 992B Railroad Watches.
LARRY CRUTSINGER,
P.O. Box 8514, Norfolk, VA 23503
757-650-9470, E-mail: detent21@aol.com
www.militarywatchmuseum.com

The Original
Troop-Balas Labs
Silcon-7® Sealant $5.95
One-Dip Solution® $10.50
Crystal-Kleer® Rouge $6.50
KT-22 Microlubricant® $3.50
www.troop-balas.com
800.423.3294

DOCTOR'S WATCHES - beautiful German design, Swiss mechanical ETA movement, good price. Contact Mark Butterworth for info at (800) 258-5418 or bci@muscanet.com



Swiss made Watch & Clock repair tools
Hard to find precision horology tools
Fast Free shipping

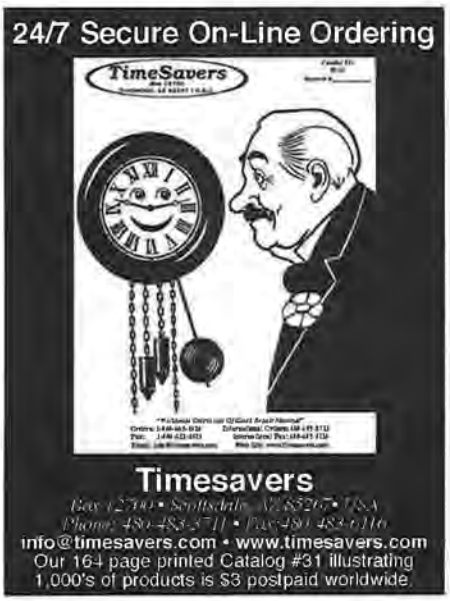

eckcells
Your battery connection, and more...
379 Main Street Stoneham, MA 02180
CHECK OUT ECKCELL'S WINTER SPECIALS
#3 Genuine Dumont steel tweezers
$17.50 each, $50.00 for 3 pair
Genuine stems for most ETA models including:
ETA 2824-2, ETA 2892, ETA 255.---,
ETA 256.---, ETA 955.---, ETA 956.---,
ETA 976.002, ETA 978.002
Regularly $3 each. Stock up now at $10 for 5 and $20 for 12.
Sorry, no mix and match for this special price.
(800) 514-1270
Terry Kurdzionak, member AWCI

Regula and H. Herr Cuckoo Movements
Complete selection. Also factory stopper new Hermle, Urgos, and Kieninger at 60% OFF our regular wholesale prices. Call Butterworth 1-800-258-5418.

Clockmaking & Modelmaking Books, Videos & DVDs by W. R. Smith, 8049 Camberley Drive, Powell, TN 37849. Phone 865-947-9671; E-mail: WRSmith2@aol.com

DASHTO INC./TOM MISTER
PO Box 61894
Virginia Beach, VA 23466
http://www.dashto.com
Huge and everchanging selection
Used and new horological items
Sold by internet list only
TOOLS/EQUIPMENT
MATERIAL ASSTS/PARTS
POCKET/WRISTWATCHES
WATCH MOVEMENTS
WATCH CASES & DIALS
WATCH BRACELETS/BUCKLES
MUCH MORE
WE BUY & TRADE ALSO
tom@dashto.com
http://dashto.org

Annual L&R Ultrasonic Sale
now in progress!

Prices slashed on all top quality L&R Ultrasonics Cleaners until December 31, 2005.
MERRITT'S CLOCK & WATCH REPAIR SUPPLY DEPARTMENT
Call or write for our New Fall 2005 Catalog of Clock & Watch Repair Supplies
1860 Weavertown Rd, Douglassville, PA 19518
610-689-9541 FAX: 610-689-0567
Browse through our inventory and order on-line 24-hours a day! ... www.merritts.com

FULLY WARRANTEED
Watch Timers & Cleaners

FACTORY REBUILT WATCH TESTING EQUIPMENT
Call or Write for details:
Tel: (516) 437-8700
Fax: (516) 437-8708
VIBROGRAF U.S.A. CORP.
504 Cherry Lane, Floral Park, NY 11001
www.vibrografusa.com

STUCK FOR A MOVEMENT?
or a watch part? Call Don Kroker's Watch Movements. (559) 229-8423 or write 4325 No. 5th St., Fresno, CA 93726.

BIDWIT.com
FUNNY NAME...SERIOUS AUCTIONS
Watchmakers, Jewelers, Collectors, Hobbyists Check out the best auction site on the web tailored to you!

- **SELL YOUR ITEMS**
- **PLACE REQUESTS FOR ITEMS**
- **TRADE & NEGOTIATE**

And do it all without getting eaten up by auction fees.
ZERO to list
ZERO to request
ZERO to image host
Register now at bidwit.com!

BIDWIT ALSO THE ONLINE HOME OF
MURRAYS
Jewelers Supply, Inc.
- TOOLS
- EQUIPMENT
- SAME DAY SERVICE
- SUPPLIES FOR WATCH & JEWELRY REPAIRS

With Over 50 Years Experience We Are A Complete Supply House For The Watchmaker & Jeweler
We are continually adding to our listings online. If you don't see something you need at our e-store, please email, call or stop in and see us. Our personnel are trained to understand your technical needs and welcome the opportunity to serve you.
3155 PRESIDENTIAL DRIVE, SUITE 102
ATLANTA GA 30340
PH: 770.452.1415 / 800.535.8560
FAX: 770.452.7540
EMAIL: MURRDS1@AOL.COM

HELP WANTED



Clock Technicians, Watchmakers

Chelsea Clock, one of America's pre-eminent clockmakers is seeking clock makers/repair technicians for their service department. 5 years industry experience; familiarity with platform escapements a plus. We are a growing business servicing a broad range of American and European clocks. Excellent working conditions, competitive salary, relocation assistance. Join our new management team and become part of our exciting success story. Send resume and salary requirements to:

CHELSEA
CLOCK CO.

284 Everett Avenue
Chelsea, MA 02150
617-884-0250
hr@chelseaclock.com

Watchmaker/Retail Sales/F.T./P.T.
Little experience OK. Salary/bonus/benefits in retail store in Tampa, FL. Fax resume and phone number to: (925) 735-7405

SITUATIONS WANTED

Clockmaker, college trained, 18 years experience, seeking employment, coastal USA preferred. Reply to Box SW22006, c/o *Horological Times*, 701 Enterprise Drive, Harrison, OH 45030.

Experienced English watchmaker. British Horological Institute certified. Has Rolex and Omega training, seeks employment in Florida with top quality company. Reply to BOX SW42005, c/o Horological Times, 701 Enterprise Drive, Harrison, OH 45030.

Apprentice Watchmaker & School of Horology Graduate seeks position with professional watchmaker/jeweler in eastern or central Pennsylvania. Resume and references upon request. (570) 450-0855

SCHOOLS

THE CHATTANOOGA HOROLOGICAL INSTITUTE offers training in clock and watch repair. Call (423) 821-2703 or visit www.clockandwatch.com

WANTED TO BUY

WE BUY WATCHES
Rolex, Patek, Cartier, LeCoultre, Vacheron, Breitling, Audemars, Tudor and others. Modern or Vintage. **Doug Giard, 586-774-3684**

Wanted: Tempo 400 Cleaning Machine
Midwest jeweler looking to add another Tempo 400. Willing to pay top dollar, if in good working condition. If interested, please contact: Dave Tellmann 937-298-0171 or via e-mail at info@jamesfree.com

We pay up to 97% of market for karat gold scrap (any amount)! Also, buy filings, gold fill, sweeps, silver, platinum! Immediate 24-hour payment return mail! Ship insured/registered mail to: AMERICAN METALS COMPANY, 253 King St., Dept. HT, Charleston, SC 29401. Established 1960. Phone (843) 722-2073

$$ Buying OLD Rolexes $$
$$ Paying Highest Prices Ever $$
Daytona Cosmograph $10K - $25K
Submariner $1,500 - $3,000
GMT $1,500 - $3,000
Explorer I $1,500 up
Explorer II $3,500-$6,500
Chronograph $8,000 - $20,000
ANY OLD ROLEX WANTED
SERIOUS PRICES PAID
DON'T SELL UNTIL YOU GET MY OFFER
Don Meyer - (214) 460-5822

WE BUY ENTIRE WATCH COLLECTIONS

Call Toll Free
1-800-426-2344
203-366-2500



Ron Fried, President
"I look forward to giving you honest and reliable service."

SPECIALTY METALS REFINING COMPANY, INC.
1915 Black Rock Turnpike
Fairfield, CT 06430

Members:
Better Business Bureau
Jewelers Board of Trade

242 Consecutive Ads

WANTED WATCH BOXES
Buy - Sell - Trade
We want most major brands. Also buying high-end jewelry brand boxes. **Doug Giard, 586-774-3684**

ATTENTION RETIRED WATCHMAKERS
Call us before you sell your parts, tools, and watches. We have helped over 130 watchmakers in the last six years to dispose of their accumulations. When you're really ready to sell, we're ready to buy! Phone (229) 928-9092. Ask for Jeff or Nancy. E-mail: jeffnancy@mchsi.com

$$ ROLEX PARTS NEEDED $$
Absolute top dollar paid for crowns, old dials, movements, tools, memorabilia, bezels, bands, cases.
Small/Large Accumulations Wanted!
Don Meyer - (214) 460-5822



We also fit glass crystals to Openface, Hunting, and English chain drive watches. Complete watches, dials, movements, case springs for sale.

G F Specialties
1-800-351-6926
P.O. Box 170216
Milwaukee, WI 53217

$$ Modern & Vintage Watches $$
Always buying Rolex, Patek Philippe, Breitling, Cartier, LeCoultre, Tiffany, Universal Geneve, any fine Swiss wrist or pocket watch
Don Meyer - (214) 460-5822

Chronograph movements, cases, dials, parts and watches. Paying: Valjoux 72 - $200.00; Venus 178 - $150.00; Longines 13ZN - $350.00; Valjoux 69 - $350.00; also Rolex 620 NA - $350.00. Dean Sarnelle, 25 W Beverley St., Staunton, VA 24401; 1-866-877-8164.

$$WANTED ANYTHING$$
Rolex - Cartier - Patek - Breitling
Panerai - Le Coultre
Vacheron - AP - Etc.
Watches, Boxes, Dials, Links, Parts, Bands, Movements, Crystals, Bezels, Crowns, Clocks, Signs, Posters, Catalogs, Instruction Books, Polish Cloths, Wallets, Hats, Shirts, Promo Items, ANYTHING! **Doug Giard, 586-774-3684**

WATCH MATERIAL DISTRIBUTORS
Please call us if you are interested in selling your business.
All replies confidential.
Contact Pat Cassedy
Cas-Ker 1-800-487-0408



AWCI Home Study Course in Clock Repair

Based on the original correspondence course written and administered by Laurie Penman, AWCI's resident clock instructor, this course is constructed to provide information and instruction in a manner that is immediately useful in both learning and practicing clock repair. The course contains 16 lessons. At the completion of each lesson you will receive comments and suggestions from Laurie Penman, and a pass or fail grade. Those who achieve a pass grade in each section will receive a certificate of completion. Mr. Penman will be available to answer questions or offer suggestions to each student.

The AWCI Home Study Course in Clock Repair package contains all the material and information necessary to successfully learn the fundamentals of clock repair, including *The Clock Repairer's Handbook* by Laurie Penman and a one-year subscription to Steven G. Conover's monthly publication, *Clockmaker's Newsletter*. Course participants will be invited to attend a 2-day meeting at AWCI to confer with Mr. Penman and meet other students.

AWCI Members - $750

Non-members - $835

Contact Nancy Wellmann
AWCI Education Coordinator
E-mail: nwellmann@awci.com
Phone Toll Free 1-866-367-2924 ext. 303 or (513) 367-9800



Advertisers' Index

American Perfit Crystal Corp. 21
(212) 246-8292

Borel & Co., Jules 5
(816) 421-6110

Butterworth Clocks, Inc. 41
(800) 258-5418

Cas-Ker Co. ..... inside back cover
(513) 674-7700

Chronos/WCR 37
(303) 296-1600

Clocks 33
011 01 31 228 6638

Esslinger & Co. ..... inside front cover
(651) 452-7180

Ferrell & Company 29
(213) 627-6031

Frei, Otto 31
(510) 832-0355

GRS Tools 25
(800) 835-3519

International Watch Collectors Society 51
(516) 374-5060

Livesay's, Inc. 7
(813) 229-2715

Maxell Corp. ..... back cover
(201) 794-5900

McCaw Co., William S. 3
(419) 243-3720

Smith Supply House 27
(213) 622-1687

Twin City Supply 33
(952) 545-2725

Vibrograf U.S.A. Corp. 9
(516) 437-8700

Zantech 49
(800) 441-7569

AWCI Employee Directory

James E. Lubic, CMW
Executive Director
Education & Technical Director
1-866-367-2924 ext. 310
jlubic@awci.com

Lucy Fuleki
Assistant Executive Director
1-866-367-2924 ext. 304
lfuleki@awci.com

Thomas J. Pack, CPA
Finance Director
1-866-367-2924 ext. 311
tpack@awci.com

Laurie Penman
Clock Instructor
1-866-367-2924 ext. 318
lpenman@awci.com

Manuel Yazijian, CMW
Watchmaking Instructor/Certification Coordinator
1-866-367-2924 ext. 309
myazijian@awci.com

Donna K. Baas
Managing Editor/Advertising Manager
1-866-367-2924 ext. 307
dbaas@awci.com

Nancy L. Wellmann
Education Coordinator
1-866-367-2924 ext. 303
nwellmann@awci.com

Sharon McManus
Membership Coordinator
1-866-367-2924 ext. 302
smcmanus@awci.com

Mary Huff
Shipping Coordinator
1-866-367-2924 ext. 305
mhuff@awci.com

Heather Weaver
Receptionist/Secretary
1-866-367-2924 ext. 301
hweaver@awci.com

Jim Meyer
IT Director
1-866-367-2924 ext. 323
jmeyer@awci.com

American Watchmakers-Clockmakers Institute
701 Enterprise Drive
Harrison, OH 45030
Phone: Toll Free 1-866-367-2924
(513) 367-9800
Fax: (513) 367-1414
E-mail: awci@awci.com
Website: www.awci.com
Office Hours: Mon-Fri 8:00 to 5:00 (EST)

Looking for Accutron parts?

Call today. These are hard to find!



Original Accutron 218 Crowns #56PY & 56SS

900.005.01 10KY
900.005.02 Stainless Steel
$15.00ea 3@$12.00ea



Original Accutron 218 Crown #781

781 Steel Fits 218 Diver
900.005.05
$15.00ea 3@$12.00ea



Original Accutron 242 Step Motor #20.510

900.005.11 .....**$49.00**



Original Accutron 2300 Coil #711

900.005.09.....**$49.00**



Original Accutron 219 Fourth Wheel #107

900.005.03 .....**$10.00**



Original Accutron 219 Index Wheel #112

900.005.29 .....**$49.00**



Original Accutron 219 Circuit Board

900.005.28 .....**$49.00**



Original Accutron Back Gaskets
for 218 #G780
900.005.08 .....**$5.00**
for 214 #G735
900.005.07.....**$5.00**



Accucell-1

1.35 Volt Silver Oxide replacement cell for tuning fork watches. Replaces mercury 343 & 387.
$6.50ea 4@$5.95ea



Original Accutron 214 Hatch Gasket #G736

900.005.06 .....**$5.00**



Original Accutron 214 Index Wheel #112

900.005.12 .....**$49.00**

While Supplies Last



Accutron 218 Retrofit Kit

Includes ISA 1198/42-4 Movement & Movement Ring.
900.005.14 218 Kit.....**$25.00**
900.005.16 Ring only...**15.00**



Used - Reconditioned Accutron 218 Movement

900.005.15 .....**$150.00**

Used - Non-Running Accutron 218 Movement

900.005.17.....**$60.00**



Original Accutron 218 Cell Coil #715

900.005.04 .....**$75.00**



Original Accutron 219 Cell Coil #715

900.005.10 .....**$49.00**



Cas-KerCo.
2550 CIVIC CENTER DR PO BOX 31167
CINCINNATI OH 45231-0167

CALL 1.800.487.0408
FAX 1.800.487.5848
LOCAL PH 513.674.7700 FAX 513.674.0600
Shop our web site: www.casker.com

VISA
MasterCard

THE NEW MAXELL BATTERY PACKAGE. PROOF OF AUTHENTICITY.

Maintains Maxell's Unique Color Coding System

One-of-a-Kind Authentication Hologram

Clear, Bold Model #'s

Individual UPCs on Back of Package

30% Lighter than Previous Packaging

Smaller Card Size Fits Popular Watch Battery Storage Systems

Easy-to-Open Pill Packing (vs. Blister)





maxell

Expanding Memory & Mobility

Batteries that are counterfeit, or otherwise not factory authorized, have become an epidemic. They perform poorly. They lack reliability. And they ruin the trust between buyers and sellers. That's why Maxell has developed new holographic battery packaging that guarantees authenticity. Extremely difficult to copy, this new packaging ensures the peak performance and reliability you can expect from genuine Maxell batteries. Accept no substitute.

Recordable Media Data Storage Portable Energy Technological Partnerships

© 2004 Maxell Corporation of America