HOROLOGICAL™ TIMES

September 2007



American Watchmakers-Clockmakers Institute



THOSE WHO PUT

THEIR NAME

ON THE **OUTSIDE,**

PREFER **OUR NAME**

ON THE **INSIDE.**



©2007 Maxell Corporation of America

THE SHARPER IMAGE®

REWARD CARD

RECEIVE ONE (1) FREE $20.00 SHARPER IMAGE REWARD CARD FOR EVERY 1,500 MAXELL SR, CR AND LR MICRO-BATTERY TEAR STRIPS PURCHASED.

OFFER VALID AUG 1 - SEPT 30, 2007. SOME RESTRICTIONS MAY APPLY.

maxell

THE WORLD LEADER IN MICROBATTERY TECHNOLOGY

HOROLOGICAL™ TIMES

VOLUME 31, NUMBER 9, SEPTEMBER 2007

Official Publication of the American Watchmakers-Clockmakers Institute

EDITORIAL & EXECUTIVE OFFICES

American Watchmakers-Clockmakers Institute (AWCI)
701 Enterprise Drive
Harrison, OH 45030
Toll Free 1-866-FOR-AWCI (367-2924)
or (513) 367-9800
Fax: (513) 367-1414
E-mail: awci@awci.com
Website: www.awci.com
Office Hours:
Monday-Friday 8:00 AM to 5:00 PM (EST)
Closed National Holidays

Managing Editor & Advertising Manager
Donna K. Baas

Associate Editor & Design Associate
Katherine J. Ortt

Executive Director/Education & Technical Director
James E. Lubic, CMW21

Assistant Executive Director
Lucy Fuleki

Finance Director
Thomas J. Pack, CPA

Clock Instructor
Laurie Penman

Watchmaking Instructor/Certification Coordinator
Manuel Yazijian, CMW21

Education Coordinator
Nancy L. Wellmann

Membership Coordinator
Sharon McManus

Receptionist/Technical Support
Heather Weaver

IT Director
Jim Meyer

***HOROLOGICAL TIMES* ADVISORY COMMITTEE**

Ron Iverson, CMC: Chairman
Karel Ebenstreit, CMW
Jeffrey Hess
Chip Lim, CMW, CMC, CMEW
E-mail: htcomm@awci.com

Reprinting and reproduction is prohibited without written permission from the American Watchmakers-Clockmakers Institute. Copyright ©2007 by the American Watchmakers-Clockmakers Institute.

HOROLOGICAL TIMES (ISSNO 145-9546) is published monthly and copyrighted by the American Watchmakers-Clockmakers Institute, 701 Enterprise Drive, Harrison, OH 45030-1696. Subscription price for the public is $98.00 per year ($6.50 per copy). Members subscription is $45.00 which is included with annual dues of $98.00. Periodicals postage paid at Harrison, OH 45030 and additional entries. POSTMASTER: Send address changes to HOROLOGICAL TIMES, 701 Enterprise Drive, Harrison, OH 45030

CONTENTS

FEATURES

Jaeger-LeCoultre Gyrotourbillon, Part 1, By Ron DeCorte 6
Timing Manipulations, Part 1 12
Clockmakers Get Set, By Jerry Faier 18

COLUMNS

Springs, Part 3, By Laurie Penman 26

DEPARTMENTS

President's Message, By Dennis Warner 2
Executive Director's Message, By James E. Lubic 3
On the Web 3
Questions & Answers, By David A. Christianson 4
From the Workshop, By Jack Kurdzionak 22
New Members 31
Bulletin Board 32
In Remembrance 33
Classified Advertising 44
Advertisers' Index 48
AWCI Staff Directory 48

EDUCATION

AWCI Correspondence Course in Clock Repair 33
AWCI Academy of Watchmaking Classes 34
AWCI 21st Century Certification Exam Schedule 34
Watchmakers Lathe I and II 35

SPECIAL INTEREST

Seeking Candidates for the AWCI Board of Directors 17
AWCI Directors' E-mail Address Directory 17
North Carolina Watchmakers & Clockmakers Auction 21
Hermle Movements Needed 29
Horological Association of Virginia Annual Convention 36
AWCI Recognizes Long-Time Members 38

COVER

This month's cover features the Jaeger-LeCoultre Gyrotourbillon



BOARD OF DIRECTORS

OFFICERS

Dennis J. Warner, CW21: President
dwarner@awci.com

James Sadilek: 1st Vice President
jsadilek@awci.com

Tamara Houk, CW21: 2nd Vice President
thouk@awci.com

Matt Henning, CW: Secretary
mhenning@awci.com

Jack Kurdzionak, CW21: Treasurer
jkurdzionak@awci.com

DIRECTORS

Glenn D. Gardner, CMW
ggardner@awci.com

Roland (Ron) Iverson, CMC
riverson@awci.com

Lloyd Lehn, CC
llehn@awci.com

Doug Stuart
dstuart@awci.com

James K. Zimmerman, CMW, CMC, CMEW
jzimmerman@awci.com

Dan Spath, CMW: Affiliate Chapter Director
dspath@awci.com

Elbert Lewis, CMW: REC Director
elewis@awci.com

Tamara Houk, CW21: IAB Director
thouk@awci.com

IMMEDIATE PAST PRESIDENT

Jim Door
jdoor@awci.com

FELLOW

American Watchmakers-Clockmakers Institute

Robert F. Bishop
James H. Broughton
Fred S. Burckhardt
Alice B. Carpenter
David A. Christianson
George Daniels
Wes Door
*Henry B. Fried
*Josephine F. Hagans
*Orville R. Hagans
Ewell D. Hartman
*Harold J. Herman
J.M. Huckabee
Gerald G. Jaeger
*Benjamin Matz
Robert A. Nelson
*Hamilton E. Pease
Archie B. Perkins
Antoine Simonin
William O. Smith, Jr.
Milton C. Stevens
*Marvin E. Whitney

*Deceased

President's Message

By Dennis Warner, CW21

The AWCI annual convention just concluded and we are ready for a new year. New ideas and goals were discussed, voted on and will begin implementation immediately.

The new Executive Committee was seated, they are:

President	Dennis Warner, CW21
1st VP	James Sadilek
2nd VP	Tamara Houk, CW21
Secretary	Matt Henning, CW
Treasurer	Jack Kurdzionak, CW21
Also seated:	
Affiliate Chapter Director	Dan Spath, CMW
Industry Advisory Board Director	Tamara Houk, CW21
Research & Education Council Director	Elbert Lewis, CMW
Newly Elected Directors	Doug Stuart
	Lloyd Lehn, CC
	Jack Kurdzionak, CW21
Current Board:	Glenn Gardner, CMW
	Roland Iverson, CMC
	James K. Zimmerman, CMW, CMC, CMEW
Immediate Past President	Jim Door

With the makeup of this Board we have a strong, versatile and talented group of individuals who will work together as a group. You will find a summary of the motions from the Board of Directors' meeting at: www.awci.com. A complete set of minutes will follow shortly after their approval by your Board of Directors. I am asking persons who wish to serve on the many important committees of AWCI to make a copy of the Volunteer Committee Form found in the July issue of *Horological Times* on page 50. Fill it out and forward it to AWCI and they will see that I am informed of your wishes. AWCI, under the guidance of the Board of Directors and the office personnel, will work to make 2007-2008 a very successful year.

Hope to see everyone at next year's Annual Convention in St. Louis, MO during the first weekend of August.

Executive Director's Message

By James E. Lubic, CMW21

Congratulations to all the newly elected AWCI Directors: Jack Kurdzionak, Lloyd Lehn, Doug Stuart, Affiliate Chapter Chairman Dan Spath, REC Chairman Elbert Lewis, and IAB Chairwoman Tamara Houk. I look forward to working with all of you during the upcoming year.

The Rolex ELM Charitable Trust Dinner and Awards Program is the one time every year that we say thank you to all who have been instrumental in donating their time and expertise on behalf of the Institute. Thank you to Rolex for sponsoring this event, and congratulations and thank you to all the award recipients. We didn't have an AWCI Fellow or Life Time Achievement Award this year, but we did have two employees who have reached milestones. Donna Baas, our Managing Editor, has been with AWCI for 25 years, and Nancy Wellmann, our Education Coordinator, 21 years. Congratulations and thank you to both of you.

The October issue of the *Horological Times* traditionally is the issue when we report to our members on the activities of the Annual Convention and Educational Symposium. Since the meeting was in our backyard in Covington, Kentucky, organizing the meeting wasn't quite as worrisome as when we are out of town. The members of the Convention Committee, as always, were a big help. Those members are Wes Cutter, Bob Good, Terry Kurdzionak, Lloyd Lehn, and Brad Wellmann. Thank you for your contributions. Thank you to Lucy Fuleki our Assistant Executive Director, since she is the one who does most of the coordinating.

Since we were in town the office plays a bigger roll, and Tom Pack our Finance Director coordinated the auction and found a local "professional" auctioneer, Dale Lutz, and his wife Rachael to volunteer to run the auction, along with our receptionist Heather Weaver, for the ELM Trust. They did a wonderful job. The ELM Trustees were instrumental as they started organizing and planning back in February for this event. Local Trustee and Past President Charles Cleves, and his son Michael, spent many Wednesday afternoons organizing the 120 different lots that were auctioned off. Thank you Donna, Lucy, and Nancy for making sure we all were able to eat. By the way, the auction raised $10,000 for the ELM Charitable Trust. The sponsor of the evening's dinner and festivities was Jeager-LeCoultre. Thank you to all for helping to make this a success.

Transportation for the convention was sponsored by Swatch Group USA. Thank you for shuttling our attendees from one location to another.

This year we had a new sponsor, LVMH Watch and Jewelry sponsored our Educational Symposium. Thank you LVMH. And thank you to the Symposium presenters: our own Manuel Yazijian and Laurie Penman, Tom Schomaker, Mark Butterworth, Tamara Houk, and Lloyd Lehn.

Thank you to all who displayed at the Trade Fair: Terry Kurdzionak of Eckcells, Henry Kessler of Sy Kessler Sales, Gary Borel and Don Wester of Jules Borel, Pat Cassedy of Cas-Ker Company, and Tim Walker of Site Creator. Thank you Terry Kurdzionak for all you do year after year to make the Trade Fair a success.

Finally, thank you to all the spouses who put up with the time and effort that these individuals put forth on behalf of AWCI.

I apologize if I forgot anyone. I can assure you that everyone's efforts are appreciated.

On the Web

AWCI Certification Exam Schedule



AWCI Certification information is available online:
www.awci.com/services/certification.php

Also online

Parts & Tool Forum

This forum assists AWCI members in finding watch and clock parts and tools. Check it out at:
www.watch-clockmakers.org/msgbrd/index.php

Career Center

The Career Center was constructed to help connect AWCI members with new employment opportunities. Visit *www.jobtarget.com/home/index.cfm?site_id=317* for more information.

Pricing Survey

The AWCI Business and Pricing Survey provides statistics on business expenses, rates charged by watchmakers & clockmakers, and much more.
Visit *www.awci.com*

www.awci.com

Questions & Answers

By David A. Christianson, CMW21, FAWI

Question

Could you please help identify this clock? I am trying to find out the manufacturer and the approximate date it was made. Note: The letters DGMS are on the pendulum leader and gong base, also the wings logo with dial in between.

Michael Bush
Columbus, OH



Answer

The winged dial trademark tells us that your clock movement was made by Schlenker & Kienzle of Schwenninger, a town in Germany's Black Forest region. This particular version of their winged dial trademark was registered in 1898 and was still in use in 1908. Several other versions of this trademark were used into the 1940s. The company itself was formed in 1883. Because of this information, along with the style of the movement and case, your clock would have been made right at the turn of the 20th century.

Dr. Matt Clark, AWCI's expert on patents, tells us that the initials DGMS, found on your gong base and pendulum leader, stand for Deutscher Gebrauch Muster Shutz. DGMS is a type of patent within the German Patent System indicating a variation on an already existing German patent.









Borel

For the Latest in Watchmaker's Tools & Parts
visit @www.JulesBorel.com, click on products

Borel



BERGEON

New Ergonomic Screwdriver Sets





Very comfortable to use, these new sets feature screwdrivers with special black elastomer grips; low friction, self-lubricating brightly colored heads; stainless steel bodies; and special alloy st. steel blades. A full range of 10 sizes, .50, .60, .80, 1.00, 1.20, 1.40, 1.60, 2.00, 2.50, and 3.00 mm. Includes extra blades in color-coded tubes.

BG6899 Set of 10 with smooth rotating, heavy 90mm base and extra blades **$ 239.-**
BG6899-A10 Set of 10 in black wooden storage case and extra blades **$ 164.-**
BG6899-A05 Set of 5 smallest in black wood storage case and extra blades **$ 107.-**

ETA Mainspring Winders



New set of 12 winders specifically for newer ETA calibers. Includes handle, in a fitted wood case. Allow 3 weeks for delivery. Swiss.

BG2975-ETA $ 640.-

Individual winders $ 59.- ea.

BG2729T-ETA-01	1727-1
BG2729T-ETA-02	2000-1, 2004-1, 2094
BG2729T-ETA-03	2660, 2671, 2678, 2688
BG2729T-ETA-04	2801-2, 2804-2
BG2729T-ETA-06	2846-2
BG2729T-ETA-07	2892A2,2893-1-2-3, 2894-2, 2895-2, 2896, 2897
BG2729T-ETA-08	7001
BG2729T-ETA-09	7750, 7751, 7753, 7754
BG2729T-ETA-10	7760, 7765
BG2729T-ETA-11	6497-1, 6498-1
BG2729T-ETA-12	6497-2, 6498-2



New Bergeon Tap & Die Set

Covers 8 sizes, .30, .40, .50, .60. .70. .80, .90, 1.00mm. 3 taps of each size in a fitted wooden case. Swiss.

BG2776A Tap & Die Set **$ 445.-**

Tap Set



Assortment of 12 watchmaking taps, from .30 -1.20mm.

BG6447D $ 112.-

Borel

Jules Borel & Co.
1110 Grand Boulevard
Kansas City, MO 64106-2348

Order Desk **800-776-6858**
Order FAX **800-776-6862**
Local **816-421-6110**

Borel



1



2

Jaeger-LeCoultre Gyrotourbillon

Part 1

Ron DeCorte, CMW

With a host of multi-axis tourbillons on the market today, it's hard to find a starting point. So when JLC offered me an opportunity for an insider view of their Gyrotourbillon, I accepted without hesitation.

In the beginning, the tourbillon was designed to equalize balance wheel, hairspring, and escapement errors in the vertical positions by rotating the entire escapement approximately once per minute in a singular axis. Now, with the advent of multi-axis tourbillons, the escapement is rotated through both the horizontal and vertical planes allowing yet another possibility in error correction.

The JLC Gyrotourbillon lives up to its name as a true Grande Complication [1, execution; 2, concept], having an inclined two-axis tourbillon, perpetual calendar with instantaneous double retrograde indication, equation of time, and 8-day power reserve with up and down indication.

The Gyrotourbillon (Gyro) is the brainchild of Eric Coudray and designer Magali Métrailler. Their collaboration of engineering and design is cased in a modest sized platinum package that is easy on the eyes and the wrist. Visually, the complex mechanical attributes of the Gyro are presented in a mature and natural way without being overly dramatic or busy. Internally, the complexity is mind-boggling, having almost 600 parts and requiring a totally new engineering direction from top to bottom. The Gyro will be produced in a limited series of 75 watches, total, over 5 years (2005-2010).

Continued on page 8.

WATCH/ELECTRONIC

Energizer®
BETTER THAN EVER

Energizer® invented the world's first watch battery and is proud to be the only watch battery manufacturer in the USA. Today, our exclusive multi drain technology is evidence that our commitment to innovation is unyielding. State-of-the-art engineering also delivers world-class capacity, shelf-life and leakage resistance.

In addition, we offer a complete line of battery accessories and reference materials. *Energizer*® has the business tools available to help your business Keep Going®... and growing!



For more information about *Energizer*® batteries and battery accessories, call 1-800-426-8268, ext. 7534.



Keep Going®

©2007 Energizer Energizer, Energizer Bunny design and other marks are trademarks of Energizer


3


6


7

In this first installment of the Gyrotourbillon article I will concentrate on the tourbillon, with details of other complications presented in future segments.

Note: The watches and movements featured in this article are advanced prototypes with some components more finished than others. The pictures were taken at the bench at Jaeger-LeCoultre in Le Sentier as the watchmakers are assembling, testing, and adjusting. These images are not fully representative of the final product. In other words, these watches are works-of-art, in progress.


4

Power is supplied via two mainspring barrels [3], each fitted with sapphire covers on both sides. The sapphire covers reduce mainspring drag and allow visual inspection of the mainspring operation. The first barrel [3, lower right] is wound directly and contains a short mainspring. The power from the first barrel is transferred directly to the second barrel [3, lower left] via a great wheel. This second barrel has a longer mainspring and acts as a simple remontoir. Unlike most twin barrel configurations that have both barrels supplying power directly to the center wheel in parallel, the Gyro barrel configuration uses two

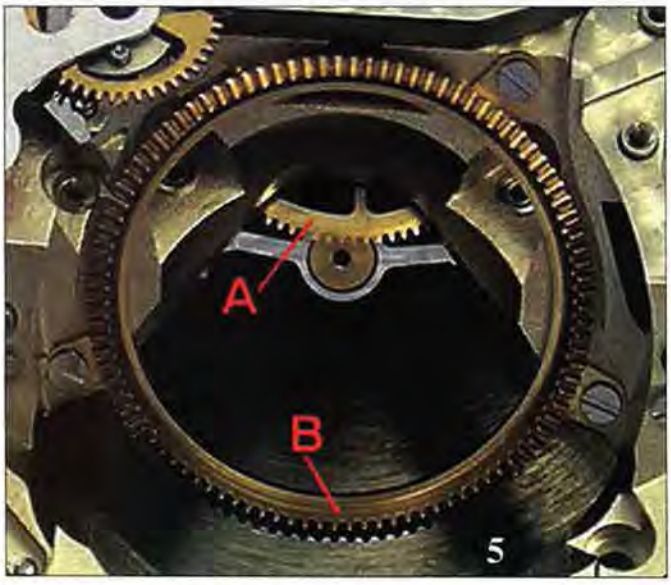

5


8

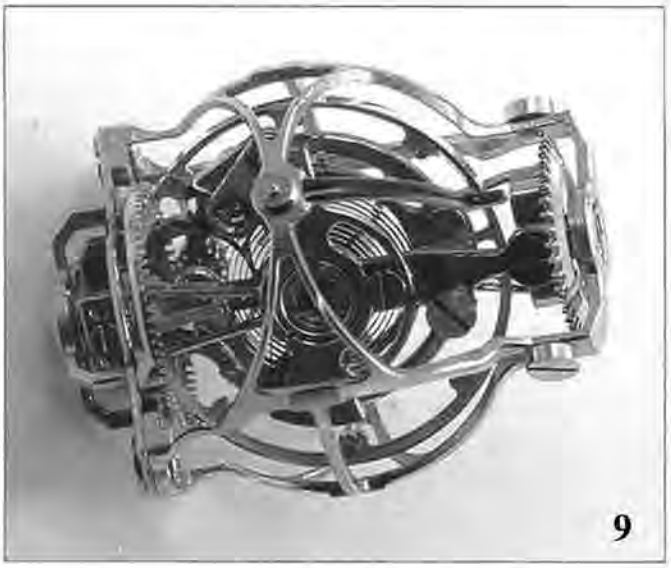

9

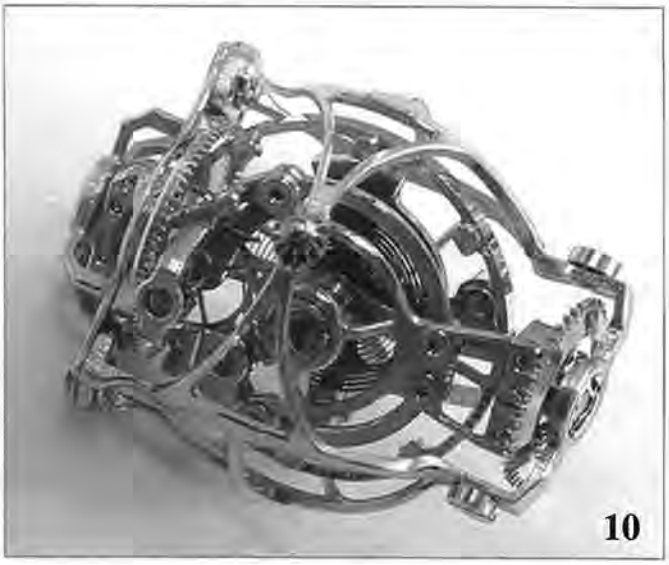

10

barrels to create a linear flow of power with each barrel spring maintaining control of the other, assuring ample but steady power to the tourbillon.

Note: Since the tourbillon is inclined, the 3rd wheel requires beveled teeth to mesh properly with the tourbillon pinion [4]. From the dial side [5] we can see the beveled 3rd wheel "A" ready to supply power to the tourbillon, and the beveled stationary wheel "B" that the inner escapement platform will revolve around.

The outer tourbillon cage [6] and its end cap [7], with stationary 4th wheel, that allows insertion of the inner escapement platform assembly. To improve strength, threaded steel inserts are pressed into the cage where screws are used. The outer cage is machined from a solid block of aircraft quality aluminum to reduce weight, an amazing feat even with computer-controlled machines!

Note: All tourbillons must be capable of accelerating and decelerating the cage, as well as the escapement, more than 5 times each second. This requires more power, and consistent power, than a conventional stationary escapement watch.

Using modern materials, such as aluminum and titanium is a great advantage compared to some early wristwatch tourbillons since the effective mass of the cage is greatly reduced. The weight of the Gyro's outer cage would be increased by more than 300% if it were crafted from steel. Being aluminum, it weighs a scant 0.035 grams—about the same as a grain of dried rice!

The inner escapement platform carries the balance wheel, hairspring (balance spring), pallet fork (anchor) and escape wheel [8]. It's pivoted at each end and is made from titanium. Again steel inserts are used for screw holes to add strength.

Two views of the assembled tourbillon cage: the dial facing side [9], and the opposite side with cage pinion [10] that will mate with the 3rd wheel.

QUICK FIT™

WATCH MATERIALS FROM

Eckcells

379 Main St. Stoneham, MA 02180
1-800-514-1270 eckcells@gmail.com

Fall 2007 Specials

Pressure Pin and Cotter Pins
Seven assortments will repair almost any bracelet

#1029 104 pieces, 26 sizes 1.0mm pressure pins, stainless steel **$18.95**

#1028-8 54 pieces, 18 sizes, 0.80mm cotter pins, stainless steel **$11.95**

#1028E 108 pieces, 24 sizes, 0.90mm cotter pins, stainless steel **$19.95**

#45205 165 pieces, 33 sizes, 0.90mm cotter pins, stainless steel **$26.95**

#1028-10 54 pieces, 18 sizes, 1.00mm cotter pins, stainless steel **$11.95**

#590 stamped end pins, 60 pieces, 5 sizes 0.80-1.20mm, stainless steel **$21.95**

BP-60A stamped end pins 60 pieces, 10 sizes 0.80-1.20mm stainless steel **$21.00**

VISA

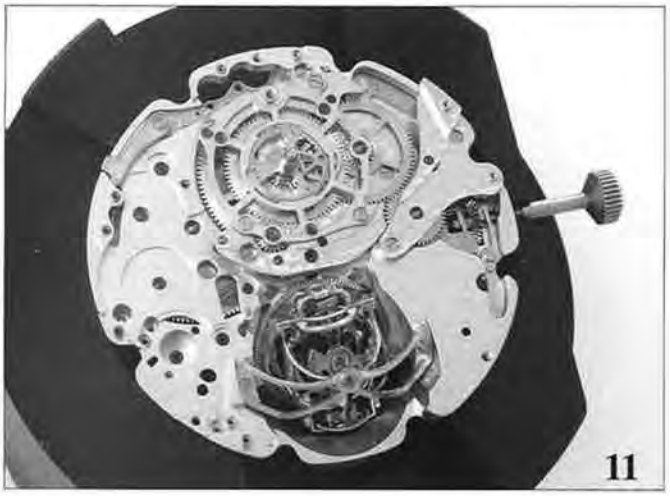
11


12


13

If you look closely at these pictures [9 & 10] you will notice two 14K gold screws on the outer cage and one on the inner escapement platform that seem to have no purpose, but indeed they play a very useful role in poising (balancing) the cage assembly.

The balance wheel and its adjusting screws are made from 14K gold to increase the functional mass while in oscillation (like having a much larger balance wheel made from a lighter material).

Another point of importance, this tourbillon uses only jeweled suspension instead of ball bearing races, which can easily be fouled by the smallest particle of dust causing stoppage.

The tourbillon cage assembly is shown installed in the movement [11]. The outer cage makes one revolution per minute and the inner escapement platform 2.5 revolutions per minute, making one complete tourbillon cycle every two minutes.

Hand finishing of the outer tourbillon cage is shown in 12 and 13.

Eric Coudray, the genius behind the Gyrotourbillon, is shown in 14.

A detailed drawing of the Gyrotourbillon cage assembly [15]: Power is transmitted from the beveled 3rd wheel to pinion "A" that is fixed to the outer cage "B". Wheel "D" with 40 teeth, fixed to the inner escapement platform, will follow wheel "C" with 100 teeth making 2.5 revolutions for each revolution of cage "B" (one minute). Inner platform "E" will make 5 complete revolutions every 2 minutes.

Part 2 will continue next month. This article is reprinted courtesy of Ron DeCorte and TimeZone.com.


14

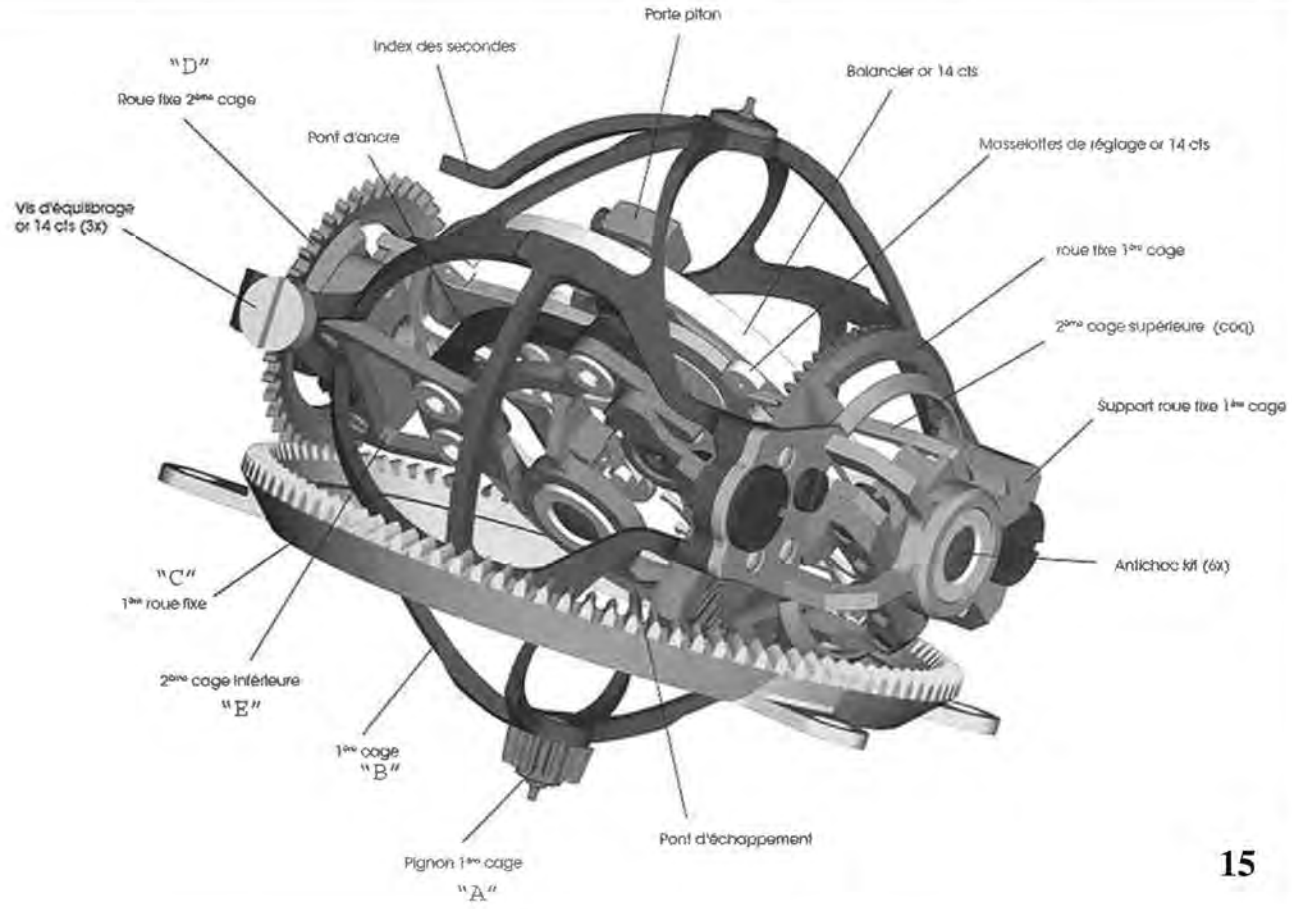

15

NEW

Poseidon LT-100

From Vibrograf®

the leading waterproof equipment supplier

- Dry Waterproof Tester using vacuum and pressure deformation test
- Color display prompts operator
- Programmable tests up to 10 Bar
- Printer can be added
- Automatic stabilization for maximum accuracy

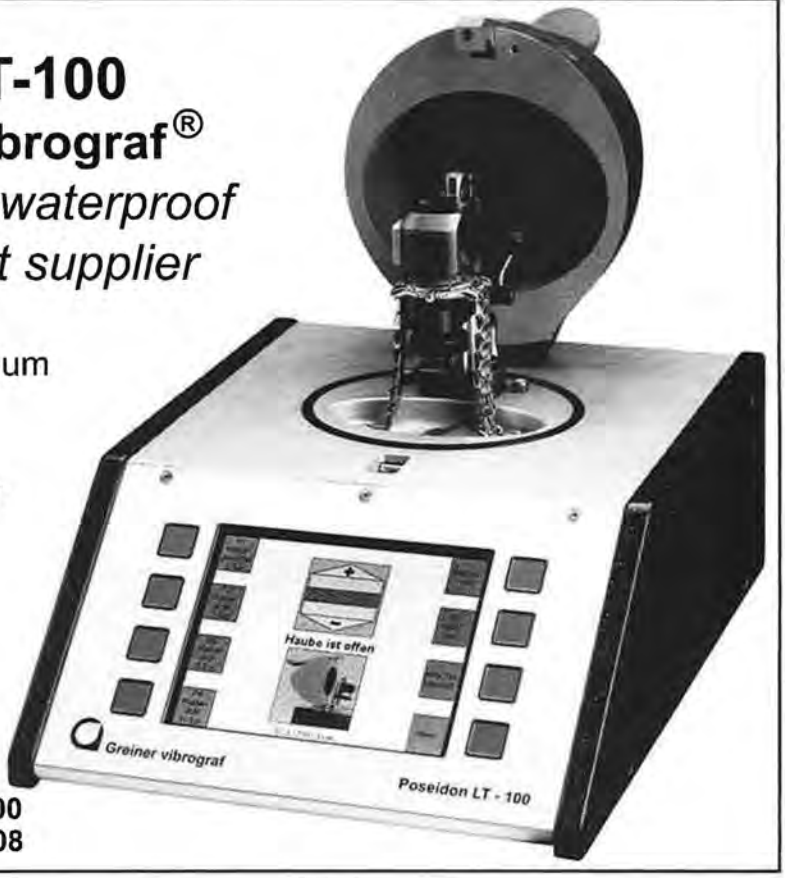

Vibrograf® Sells 12 waterproof checkers
Let us recommend the correct one for your operation and budget.

Contact
Vibrograf USA

Ph: 516.437.8700
Fax: 516.437.8708

Timing Manipulations

Part 1

The Timing Manipulations *series is taken from* Timing Manipulations *by James Hamilton, first published in 1950. The reader is reminded that at the time of publication many of the watches of that period were primarily pocket watches with parts of a certain design particular to that era. The reader is further reminded that although timing adjustment has a standard theory, in practice, however, not all techniques mentioned in the ensuing paragraphs can be directly applied to modern watches due to a difference in the design of the individual components.*

I. Manipulations to Speed Up the Rate.

a. To speed up the rate in all positions.
1. Close the regulator pins.
2. Shift both regulator pins away from the stud.
3. Shift both regulator pins away from the balance staff.
4. Close the banking pin that controls the receiving pallet stone.
5. Turn the meantime screws toward the balance center.
6. Move the regulator to the fast side.

b. To speed up pendant positions only.
1. Raise the hairspring stud.
2. Lift up on the overcoil outside the regulator pins 20 degrees.

c. To speed up dial positions only.
1. Touch in on the overcoil outside the regulator pins.

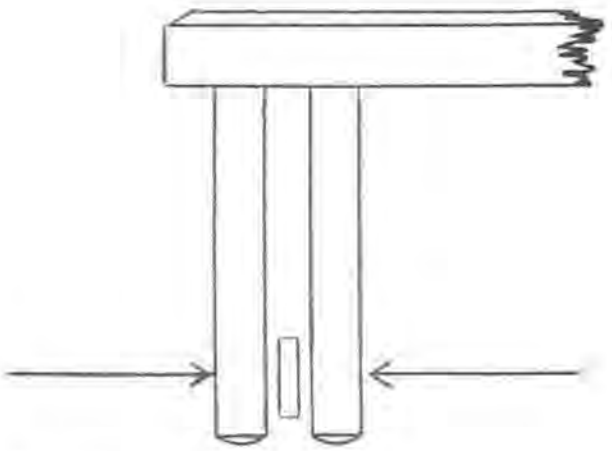

Figure 1

SECTION I

I. Manipulations to Speed Up the Rate

a. To speed up the rate in all positions.

1. Close the regulator pins. (See Figure 1.)

Effect—Fast, variable to conditions.

This affects the pendant positions more than the dial positions. The amount this manipulation affects the pendant positions more than the dial positions is directly proportional to the drop in the arc of motion of the balance when the watch is changed from dial to pendant positions. That is, a watch that has equal friction in both dial and pendant positions has practically the same arc of motion in all positions, and closing the regulator pins will affect all positions practically the same.

Except for a few experimental watches, the average watch worked on today will have from 1/8 turn to a 1/4 turn shorter arc of vibration in the pendant positions than in

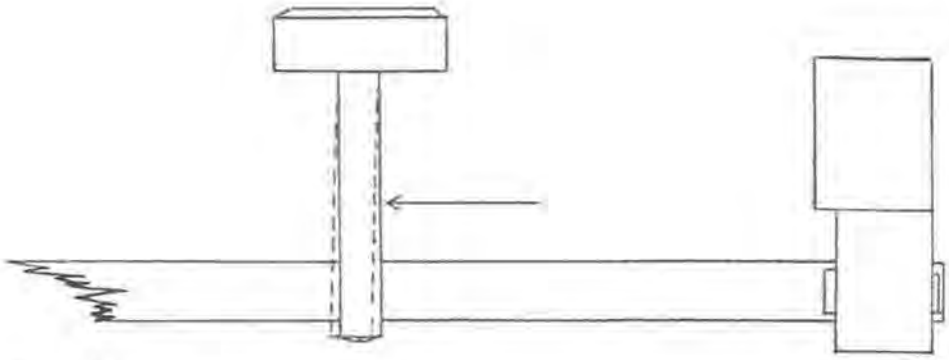

Figure 2

the dial positions. This is due both to frictional and escapement factors. This drop in arc of motion allows the vibrating point of the hairspring between the regulator pins to drift farther back toward the studding point. Thus, when the regulator pins are closed, the shorter arcs of vibration are affected more than the longer arcs of vibration.

2. Shift both regulator pins away from the stud. (See Figure 2.)

Effect—Fast, 6-10 seconds.

This has the same effect as moving the regulator toward the fast side, and shortens the effective length of the hairspring, making the vibration faster. In making this manipulation the regulator pins are maintained as close to straight up and down in the watch as possible.

3. Shift both regulator pins away from the balance staff. (See Figure 3.)

Effect—Fast, 6-10 seconds.

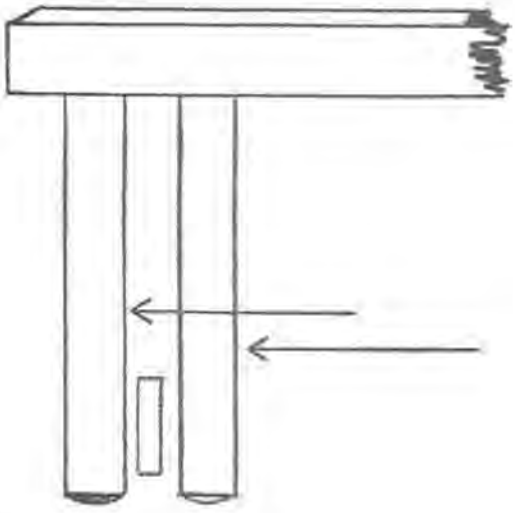

Figure 3

Theoretically, this manipulation will give all positions a slightly faster rate because the effective length of the hairspring is shortened but it will, in some cases, give the hairspring more support in some pendant positions than in others, giving those pendant positions a faster rate than the others. An example is: A rate that is slower in pendant right and pendant left can sometimes be corrected by shifting both regulator pins slightly away from the balance staff. This is necessary if, because of careless handling, the regulator pins were bent toward the balance staff. The gauge that will control the amount of regulator pin shift will be the correct hairspring vibration between the regulator pins. This is absolutely essential in almost all cases when the need for shifting the regulator pins away from the balance staff is brought about because of their being bent out of alignment.

4. Close the banking pin that controls the receiving pallet stone. (See Figure 4.)

Effect—Fast, 4-6 seconds.



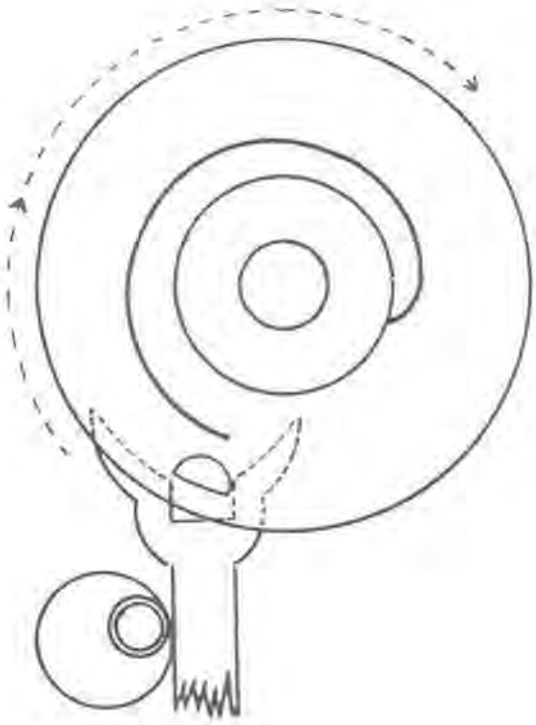

Figure 4

Generally speaking, closing the receiving stone banking pin will speed up the rate of the watch, assuming that it is a watch wherein the hairspring coils from the collet right to left. There are exceptions, though, where the hairspring coils from the collet left to right. The rule for this manipulation would be as follows: To speed up the rate of the watch an absolute maximum of 4 to 6 seconds: Close the banking pin that the pallet fork is resting on after having given the balance impulse on the winding side of the hairspring. The amount of closing is so slight that as far as the eye is concerned no material change in the slide (drawn to a minimum in the beginning) is visible. The result on the rate of the watch in using this manipulation is relative to the lessening of resistance to unlocking on the winding and faster side of the hairspring.

5. Turn the meantime screws toward the balance center. (See Figure 5.)

Effect—Variable to the amount turned, weight of screws, diameter of the balance wheel, and weight of the balance wheel. This does not change the weight of the vibrating unit, but in shifting the mass weight of the balance assembly toward the center the vibrations become faster, applying somewhat the principle of pendulum operation, whereby the shortened pendulum makes the vibration faster. Another mechanical principle involved in this manipulation is the change of leverage when turning meantime screws toward the center of the hairspring unit and balance unit. An example would be a balance wheel weighing 20 grams, 20 m/m in diameter. If the weight of this wheel were to be doubled without changing the diameter, the vibrations of the balance would be slow, very slow; then, if instead of doubling the weight, the diameter were doubled, the effect in rate would be a square of the effect of doubling the weight. Thus, wherever possible, it is considered best to avoid removing from or adding weight to a balance wheel. Almost all out of poise errors begin with improper handling of the balance wheel.

6. Move regulator to the fast side.

Effect—Fast, varying to conditions.

The regulator must be kept as close to its correct center position as possible to keep the relationship of the inner and outer terminal of the hairspring correct, especially on flat hairspring watches, to maintain their isochronal rate.

b. To speed up pendant positions only.

1. Raise hairspring stud. (See Figure 6.)

Effect—Fast, 6-10 seconds.

This creates a higher, therefore faster, hairspring action in the pendant positions. In using this adjustment, the amount the stud is raised should not be enough to throw the hairspring out of flat. It should not be more than the amount necessary to put the hairspring in correct flat condition.

One reason higher hairspring action speeds up the rate in pendant position is that the closer to the base of the regulator pins the hairspring is working, the more effect on

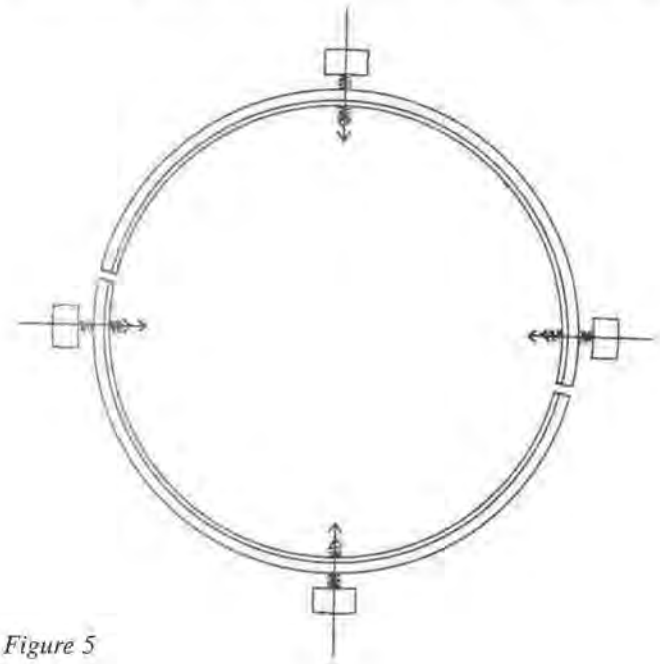

Figure 5

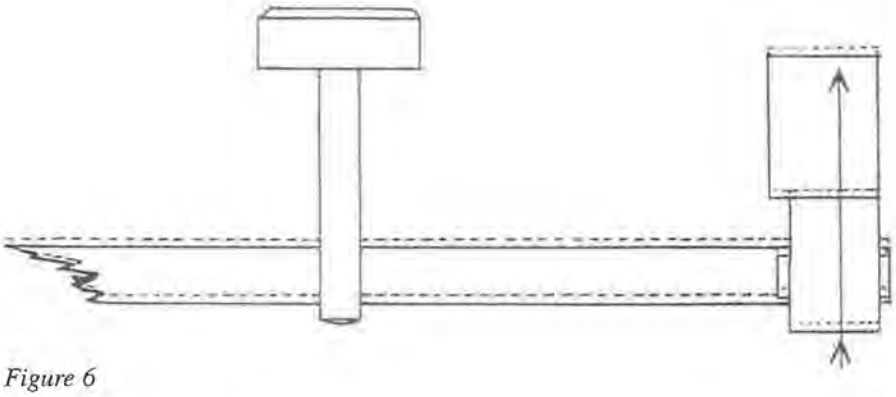

Figure 6

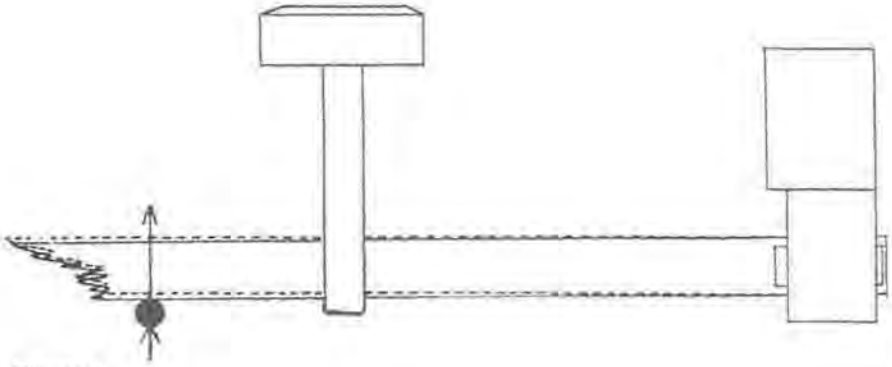

Figure 7

that spring the regulator pins will have. This is especially true in the pendant positions because of the normal leverage of the hairspring. Not much change in the spring per vibration would be required when the number of vibrations of the balance per day is considered.

2. With a fine hairspring tool, lift up on the overcoil outside the regulator pins 20 degrees. (See Figure 7.)

Effect—Fast, 6-10 seconds.

This manipulation has basically the same effect as raising the hairspring stud, creating a high, therefore a faster, action of the hairspring in the pendant position. This adjustment creates a definite bend, though not visible, in the hairspring at the studding point, with no distortion of the hairspring. And if the regulator pins are parallel, the dial positions will not be affected. It is easy to visualize the effect

Our Timing Machine Meters Rate, Beat, AND Amplitude

As Required by High End Watch Manufacturers

- Large easy-to-read LCD Digital Display of Rate, Beat Error and Amplitude in both Numbers and Graph Diagram.
- Four different display modes as well as multi-rate display, diagram shift, simulation of beat noise and "pause" functions.
- Tests Watches with Beat Numbers from 18000 to 36000.
- Automatic or Manual Beat Selection.
- All displayed diagrams and parameters can be printed to a thermal printer.



Multifunction Timegrapher for Mechanical Watches



590.859 Monochrome Timegrapher **$1395**

590.862 Color Display Timegrapher **1595**

Thermal Printer
Includes cables and paper.

590.863 Printer..... **$269**





Cas-KerCo.
2550 CIVIC CENTER DR PO BOX 31167
CINCINNATI OH 45231-0167

CALL 1.800.487.0408
FAX 1.800.487.5848
Shop our web site: **www.casker.com**

VISA MasterCard

this manipulation would have with V-shaped regulator pins.

c. To speed up dial positions only.

1. With a fine hairspring tool, touch in on the overcoil toward the balance staff outside the regulator pins. (See Figure 8.)

Effect—Fast, 6-10 seconds.

Pushing the overcoil toward the balance staff at this point causes a definite, though very slight, change in the radius of the curve of the overcoil between the regulator pins and studding point; thus, in increasing the length of the hairspring between the vibrating point and studding point, the effective length of the hairspring outside the regulator pins is shortened, which gives a faster rate in dial positions only, without affecting the pendant positions (if the regulator pins are correct). No change in the correct centering of the hairspring must be visible after making the adjustment. Overdoing will throw the hairspring out of center, which will change the beat condition of the watch and also the isochronal rate of the watch.

Timing Manipulations will continue next month.

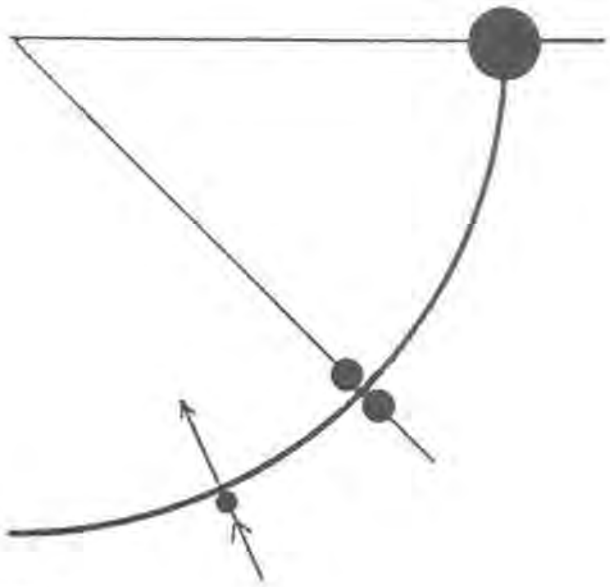

Figure 8



Payment processing tailored to your needs,
a partnership with AWCI,
and reduced rates just for members.

And you thought your timepieces were reliable.

First National Merchant Solutions can provide your business with an affordable way to accept credit and debit payments, convert checks to instant cash, and receive payments over the internet. Just some of the ways we can help you grow your business...find out more today.

800-354-3988 **www.membersales.com/awci-net**

AWCI

First National Merchant Solutions

SEEKING CANDIDATES FOR THE AWCI BOARD OF DIRECTORS

The committee involved with securing candidates to run for the AWCI Board of Directors is seeking recommendations from the membership. If you plan to suggest a possible candidate, please send that individual's name and background to: Nominations for Board of Directors Committee, AWCI, 701 Enterprise Drive, Harrison, Ohio 45030-1696 or e-mail to: nominatingcomm@awci.com

Each recommendation will be carefully considered by the committee. Candidates will be selected on the basis of their local association or AWCI experience, geographic location, present job status, horological experience, and willingness to serve. The nominating committee will notify each candidate whether they have or have not been selected by the committee by December 30, 2007.

The deadline for membership to nominate a candidate for the AWCI Board of Directors is December 1, 2007 to be considered for the 2008 election.

AWCI Directors' E-mail Address Directory

Director	AWCI E-mail Address
Dennis Warner: President	dwarner@awci.com
James Sadilek: 1st Vice President	jsadilek@awci.com
Tamara Houk: 2nd Vice President	thouk@awci.com
Matt Henning: Secretary	mhenning@awci.com
Jack Kurdzionak: Treasurer	jkurdzionak@awci.com
Glenn D. Gardner	ggardner@awci.com
Roland (Ron) Iverson	riverson@awci.com
Lloyd Lehn	llehn@awci.com
Doug Stuart	dstuart@awci.com
James Zimmerman	jzimmerman@awci.com
Dan Spath: Affiliate Chapter Director	dspath@awci.com
Elbert Lewis: REC Director	elewis@awci.com
Tamara Houk: IAB Director	thouk@awci.com

HPS COMPANIES

Importers Of All Types Of Swiss Cals
Watch Parts & Water Maker Tools

TOLL FREE PH: 866-655-3155
TOLL FREE PH: 877-608-3347
TOLL FREE FAX: 866-211-2550
1480F TERRELL MILL RD
MARIETTA, GA 30067

YOUR PRIMARY SOURCE FOR WATCH COMPONENTS

SPECIAL WATCH MOVEMENTS

ETA 280.002	$ 24.50
HARLEY 315	$ 5.95
HATTORI VX29	$ 12.95
RICOH 5650	$ 25.50

WATCH BATTERIES (ALL NOS. AVAILABLE)

377, SR626SW	$ 0.15
379, SR521SW	$ 0.24
CR2016	$ 0.28
CR1216	$ 0.45

ETA CIRCUITS

ETA 251.262	$ 9.00
ETA 280.002	$ 5.50

WATCH MATERIAL KITS (MORE THAN 100 KINDS)

D. PROOF CROWNS, 60 PCS	$ 28.00
RED GASKETS, 90 PCS	$ 42.00

GLASS KITS (MORE THAN 50 KINDS)

MAGNIFYING GLASS, 80 PCS	$120.00
FLAT M. GLASS, 2MM, 200 PCS	$ 95.00

1 YEAR WARRANTY ON ALL PRODUCTS

WE SPECIALIZE IN HARD-TO-FIND PARTS

FREE FEDEX GROUND SHIPPING FOR ORDERS OVER $100

QUANTITY DISCOUNTS OFFERED

By Jerry Faier, CMC, Education Committee Chair

Clockmakers Get Set

Time to Polish Your Skills

If this were a magazine about car racing, I would be saying, "start your engines!" However, as clockmakers, we would start polishing our bench skills in preparation for the CC21 Assessment coming in October. Last month you were given the 10 parts of the new 21st Century Certified Clockmaker program. This month, I will try to point you in the proper direction to prepare yourself for the coming events. Probably the most difficult process in clockmaking is to find out exactly how to do some skill or task the proper way when you don't have an experienced Master Clockmaker living near your work area. What a help that would be! There are some things that you can do to help that situation considerably. First, take a skill from the Clockmaker's S&P and begin to practice it again and again until you can do it with ease. Next, compare it to a finished product that you know to be from the finest clock movement that you have ever studied. Lastly, make your practice piece look exactly like that fine example! Come on, not close, make it look exactly like it. Keep trying until they match so well that you can't tell the difference or until yours looks even better. Now, take the next S&P point and so on until you have done all 25 items. (Note: The last one, #26, is customer education.)

The next step is to acquire the four movements that you will have to master to complete the requirements. Remember, you will only have an opportunity to retest on no more than two of the 10 items, so work to get it right the first time. I have a saying in my shop that I learned from some hard-working shop engineers. "Do it right or do it twice!" The problem with our trade is that: 1.) most of us don't have the time to do it twice; and 2.) we can't afford it if we could! Comebacks don't produce income—they reduce it. You want a better income? Work up your skills and this assessment will be a breeze (well for some, maybe more of a strong wind). Think you have the stuff? Show us! Gossip never paid the light bill.

To help even more, let's look at each example and I will let you think through how you can best prepare yourself. The first requirement is the Shop Review. We want to know that in your work you have a safe environment that is well lit, well ventilated, and safe to move around in. It's imperative that your customers' products are safely stored so that accidental damage doesn't occur. The Mentor has the right to stop the entire process and cancel your program if he or she feels that it is unsafe for any reason. You will be given one chance to clean things up and if it is still unsafe, you are not ready to rise to our required professional level. Best preparation—clean up your messes, straighten up your bench and organize your shop! Seems simple enough. A professional takes pride in the appearance of his/her work area, but the customer looks even closer. Want to be better? Strive for it. Make your first impression a positive lasting one now and in the future!

The next performance is the written assessment. If you have never picked up a book, maybe it's time to see if you really practice what the textbooks say. It is best to check several. When you find consistent practices discussed, you probably have the best answer. The entire assessment tries to cover those items that we cannot cover with practical examples. Review your clock history; practice a few calculations for missing gears, pendulum lengths, etc. Be sure that you know the terminology of our trade and can identify what it means. Do you know much about escapements? Can you identify the similarities and differences between the ones listed? Do you know what is meant by drop, lock and lift? Can you identify which is which? What about correcting problems with strikes and chimes? You are given scenarios to work out solutions for, and buying a new movement is not an acceptable solution, neither are a torch and a hammer! Mainsprings are getting harder to get. What do you do when you can't buy the exact replacement? What do you know about the metals you work with? How are they affected by heat, hammer and cold? It is time to start studying. You can use any book during the program. It's open book, but you have other work to do so the better you know your subject, the faster you will get through this part of the program.

The third item is a classic. The old pivot problem. Practice, practice, practice (that's the same thing they told Van

Clyburn when he went to play at Carnegie Hall)! Next, the other classic—the wheel tooth project. Same story, second verse. Practice until you can't tell which were the original teeth and which was the plug you made. Which end did you repivot? Can the assessors tell? Make them work. The best products come from attention to detail.

That's Tier 1 in a nutshell. Your Mentor will send these materials back to AWCI for you and leave you your next three challenges to work on by yourself. The catch is that you have only 14 calendar days to complete these next three and get them back to AWCI. No time to waste here!

The next box contains three more challenges. They are the General Movement Servicing of a German Floor clock movement (the Hermle 1161-853/114 or 94 cm pendulum length), the rebuilding of a lantern pinion, and the servicing of a mainspring barrel and re-holing a piece of mainspring stock.

With the floor clock movement, there are some options here. If you wish to provide your own movement (new or used) of this exact type, you may do so! AWCI will stamp the back plate of your movement with your CC21 designation when you successfully complete all items in the assessment program! We are working on getting a dial to fit these movements that says 21st Century AWCI Certified Clockmaker. Build a case for yourself, and what a show piece for your shop or home! You will hear more on that later. If you cannot provide your own movement, just tell us, and AWCI will send you one of ours to perform the needed tasks. Be prepared to do any and all of the 26 items listed in the S&P list, to prepare this movement to run as if it were new. Next, you will clean the barrel and mainspring and reload it properly. Remember; don't telescope it in the process. You must also produce a proper hole in the spring stock piece, making sure it is of the proper shape and quality like you see in the commercial ones. Check it out. Lastly, you will have to restore a

• Phone: 800-772-3456
• Fax: 800-900-3734
• E-mail: info@ofrei.com

OTTO FREI
Watch Parts Since 1930

Visit our web site
www.ofrei.com
Shop online for over 12,000 items

126 Second St., Oakland, CA 94607

Four Different 'Quick Pick' Luminous Hand Assortments – 14 pairs for Just $16.60!



Save big money when you buy luminous hands in one of our Quick Pick assortments. Just $16.60 gets you 14 pairs of hands. Choose from three assortments in popular hole sizes -- 65/100, 70/120 or 90/150 -- or a fourth for hard-to-find large hole sizes*.

*For Unitas 6497, hole sizes 115/200. Valjoux 7750 & 7751, hole sizes 120/200, and ETA quartz series 251.262 to 251.272, hole sizes 150/200.

Quick Pick Assortments

Hole size	Item no.
65/110	QP14-65-110
70/120	QP14-70-120
90/150	QP14-90-150
Large	QP14-115-120/150-200

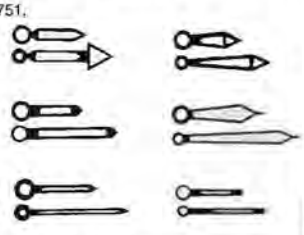

Great Deals, Quantity Pricing on 70/120 & 90/150 Luminous Hands


HAN-6100 Gold


HAN-6001 Silver

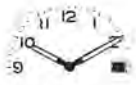
HAN-6252 Black


HAN-6153 Gold


HAN-6020 Silver


HAN-6191 Gold


HAN-6023 Silver


HAN-6125 Gold

Quantity Pricing

Qty per style	Price per pair
1-2	$3.40
3-11	$2.50
12-99	$1.66
100+	$1.42

Most hands shown above are available in gold, silver and black, with white or green luminous material

Ask for a copy of our Movement Catalog with a more complete listing of our hands.
Orders 800-772-3456 Inquiries 510-832-0355 Fax 800-900-3734

lantern pinion, a common practice in American movements. Last month, I restored about 15 of these for my customers. With the Arizona dust, the pinion wires wear badly and when the pinions wear, so starts the destruction of the wheel teeth! Best to catch that before it gets too far. That's it for the first box, and be sure to get it back to AWCI for scoring not later than 14 calendar days from when the Mentor left it. If it's late, you lose points. That's kind of like losing money when a project takes too long to get through your shop. Think about it!

Now, the second and last box has three more items to challenge you. You are asked to work with a cuckoo clock with music and dancers, a 400-day movement and suspension unit, and an American (or American style) time and strike (noted as T/S) movement. The cuckoo will NOT require General Movement Servicing (GMS-See the S&P for details) but will require you to check out, adjust, straighten, realign... well you get the picture. We send you a cuckoo clock and you have to set it up properly and adjust it to run and keep as good a time as it can, cuckoo at the proper points, and play the music and the dancers dance as they should. Efficiency here is the key. Can you take the stresses off the mechanics and the actions to "optimize" the product? The 400-day clock presents a different challenge. Here too, you will not put the movement through GMS. The mainspring, which is at the heart of this product's operation, has already been tested so we concentrate on the biggest problem bench workers have with this product—the escapement. You will have to carefully reset it to the characteristics essential for this type of clock. Get your loupe and adjust with the greatest care. There is an excellent text that deals with these. If you don't own it, you best get access to a copy of it. It's too important if you ever want to get profitable doing these products. You will also need access to a copy, as we are also requiring you to take a given damaged suspension unit and correct it, exactly, according to the *Horolovar 400-Day Clock Repair Guide*. Don't own a copy? You can check it out from the AWCI Library, but don't wait. There will be competition for this book. You can also purchase it. A professional always has a good collection of books that he/she can refer to, to get those answers that are easier to look up than remember. And by the way, did you notice we don't ask you to return the clock in beat? Yes, but there will be a sheet with some questions on it that does. Remember, we need to know if you know what you need to know. Think about it!

Lastly, but certainly not least, is the American T/S. Those of us on the Education Committee never could understand why this was left off the old version of the Certified Clockmaker. Everyone, hobbyist and professional alike, has had to handle this product. From the surveys we ran, this product was tied with or slightly exceeded the frequency in the shop of the German floor clock in volume of customer demand. Here too, you will NOT put this movement through GMS. But you will have to dismantle repair/remake a lever, re-sequence the strike, adjust the escapement, and for good measure, answer a few questions that are faster on paper. The mainsprings are taken care of for you and so is the bushing work, but the rest is yours! Be sure you know what to do with the strike and the escapement on these. Stop, start and warning. Do you know what these terms mean and how they effect the operation of this type of product? Can you reset all the pieces to function as they should, reliably, during a 4-day trial? Drop, lock and lift? There they are again. Those challenging escapements and their terms. Can you adjust this type of escapement? Show us. Get it right! Study and you can do it! Just remember that this last box too must be returned to AWCI within 14 calendar days of receipt or you start losing points.

So you understand the Committee's logic on these time limits, we want to send a message that this is a business and we do have demands. A good bench professional must be able to turn around the work in a reasonable fashion to make a living. If it would take you a week to complete one American T/S movement, I would suggest that you not quit your day job. You can't complete enough work in a month to pay the bills. That won't do! What good is a certification if it doesn't mean quality and production? Even 14 days is a long time, but we recognize that many of you who will be taking this assessment are working full time and must work these materials in with your regular production. Remember, all the AWCI certifications are about jobs. Working with clocks and watches is a lot of fun. Even as a professional, I feel it's the best job in the world because I get paid to play with wonderful toys—and I don't have to own them!

Well, that's what we want. Can you do it? Like I said, talk doesn't pay the light bill. Production with quality does. Show us your stuff!

One last request. It would help this entire program if you can help us, help you, by finding a good new or used Hermle 1161-853/114 or 94 cm movement and sending it in for use with this assessment. When the scoring is done, you get the product back for your own use. Most of the donations we have received to date have been pretty banged up and coated with slop making it difficult to use without a lot of prep work, as we are demanding consistency and uniformity of all assessment packages that are sent out. Can you help? We look forward to presenting you your new 21st Century AWCI Certified Certificate!

North Carolina Watchmakers & Clockmakers Auction

November 4, 2007

Embassy Suites Hotel
204 Centreport Drive - Greensboro, NC

Doors open at 8:00 AM - Auction begins at 11:00 AM



Sponsored by
Golden Triad Watchmakers Guild
North Carolina Watchmakers Association

$5.00 Cover Charge - 10% Seller's Fee - All Sales Final

Bring what you want to sell. Come to buy what you need.

Horological items only, please.

For additional information contact:
Rick Dunnuck - (336) 674-2686 - dunnuckr@bellsouth.net
Scott Lemons - (336) 299-6934 - ltimespring@aol.com

What Every Watchmaker Needs On Their Bench!

The Original "One Dip" Hairspring Cleaner & Rinse



Cleans more rapidly, effectively and safely, plus protects as it cleans. Can be used to remove grease, oil, lubricants, wax, adhesives, ink, flux and many other contaminants from a wide variety of products, including watches and watch parts. Cleaning action is thorough and gentle. From the laboratories of Troop-Balas.

CL500	2 oz	**$6.50**
CL501	8 oz	**11.95**
CL509	Quart	**34.00**

Bench Mats

Swiss made from A★F



BN182	**Normal**	13.75" x 9.5"	**$11.95**
BN573	**Non-skid**	13.75" x 9.5"	**11.85**
BN098	**Anti-static**	13.75" x 9.5"	**10.95**

Useful Watchmaker Accessories

OL349A	**Set of 5 Oilers**	**$9.25**
WC809	**Black Nylon Cord**	**1.25/ft**

A★F Luminous Compound Kits — call for info!

★ ★ ★ **FREE FLASHLIGHT** with the purchase of 200 Energizer batteries!! *While supplies last* ★ ★ ★

★ ★ ★ **FREE** Energizer Bunny Golf Balls with the purchase of 300 Energizer Batteries!! *While supplies last* ★ ★ ★

JIDA

TC TWINCO

Twin City Supply

www.twincitysupply.net

2230 Edgewood Avenue South
Minneapolis, MN 55426-2823

AWCI

Phone: 952.545.2725 Fax: 952.545.4715 • USA: 800.328.6009 Fax: 800.328.6001

ETA Plant Closing

This writer received a call from JIDA member, Rusty Cooper of CR Time in Texas. He said that ETA was currently in the process of shutting its Hong Kong distribution of replacement ETA movements. These movements are marked Swiss parts, rather than Swiss made. They are nickel-plated, low cost replacements for the gold plated Swiss-made movements that are stamped V8 to indicate Swiss manufacture. Some of the movements that will be affected by this change are the ETA 901.005, F03.11A, and the 902.005.

Watchmakers will still be able to purchase the higher priced Swiss-made movements, but the lower cost Asian assembled ones will be gone when current supplies are exhausted.

Jack Kurdzionak

ETA 7750 the Workhorse Mechanical Chronograph

Many Swiss manufacturers use this movement or one of its varied executions in their mechanical chronograph models. This shock resistant movement features a high frequency (4Hz=28,800BPH) balance for superior timekeeping, even when equipped with a standard balance (non-Glucydur), Etachron regulator, automatic winding with ball bearing oscillating weight, 12-hour recorder, calendars with various executions, simplified cam operated chronograph, and only two eccentric adjustments for the chronograph.

The technical guide, available online from www.eta.ch is an indispensable tool for servicing this movement. Do not service this movement without this technical guide at hand. In addition to the technical guide, a few other specialized tools are indispensable. You will need a Seitz or Horia jeweling tool, an Etachron key to turn the regulator and stud, a set of quality hand-removing levers, a key to turn the eccentric cam for the minute recorder jumper, and a Horia (or other brand) movement holder (Ref. PP 7750) to support the movement during service.

Take the movement out of the case and carefully remove all of the hands. Caution, watchmakers need to have access to genuine hands for this chronograph model before they begin repairs. A watchmaker can easily damage these hands during their removal because the manufacturers often press these hands on very tightly. There is no way to know, in advance, that you can remove all hands, without damage, until you have removed all of them. Stop here if you cannot get genuine replacement hands. It makes no sense to proceed with this repair when you know that you cannot obtain these highly visible components. Otherwise, proceed with removing the hands and understand that you may need to replace some or all of the hands. Place a sheet of clean, tough, transparent plastic over the dial. The plastic protects the dial surface during the hand removal process. One by one remove the hands. Bergeon levers (ref. 5430) are very helpful, especially for lifting the recording and second hands. Pick up the hands with brass tweezers. Steel tweezers can damage the finished surfaces of these hands. Then carefully remove the dial. Put the dial and hands aside in a clean container. Remove the day disc, date maintaining plates, jumpers and jumper spring, and date disc. Next, remove the date platform and all of the parts beneath it. Lift the driver cannon pinion (part 240.7750) with a Bergeon (ref. 4079-3A) wheel puller. The wheel puller lifts the driver cannon pinion without scarring the plate. Turn the movement over.

Remove the oscillating weight. Release the hammer spring (Ref 8350) before removing the automatic bridge. Protect the automatic bridge surface from scratching as you remove the hammer spring tension. The small tongue of the spring will scratch an unprotected bridge surface. Remove the clutch spring (ref. 8320.7750) and put it aside. Remove the automatic bridge and all parts associated with it. Next, remove the chronograph bridge (ref. 8500.7750) and the parts associated with it. Check the security of the pinion of the ratchet wheel driver (ref. 1482.7750). This pinion can be loose in the wheel and visually look OK. The watch will not automatically wind if this pinion is loose. Then release the mainspring's stored power. Upper balance jewels, balance cock and balance, and pallet can all be removed. Next, remove the ratchet wheel, crown wheel, and train wheel bridge. Note: Check the barrel arbor hole in the train bridge for wear. If the wear is slight, carefully close

HOW TO ACCESS THE ETA TECHNICAL GUIDES WEBSITE

Please follow these step-by-step procedures:

1. http://www.eta.ch (click on skip intro)
2. Click on ENGLISH (or language of your choice)
3. Click on Customer Service
4. Click on Customer Service Portal
5. Click on TECHNICAL DOCUMENTS
6. SELECT A PRODUCT RANGE
a. SELECT ALL PRODUCT RANGES
7. SELECT CALIBER OF YOUR CHOICE & download PDF files

the hole. If the wear is excessive, replace the entire bridge. Remove the train, barrel, and stop lever. Turn the movement over.

Remove the setting parts and lower balance jewels. Many manufacturers now recommend the replacement of the barrel and mainspring at every full service. Consider doing that. The barrel arbor may be reused in a new barrel unless it is also worn. Ultrasonically clean the movement and then begin reassembly. ETA, in their instructional CD, recommends assembling the train first, but many watchmakers prefer to assemble the setting and winding parts first. This writer uses a spare stem fitted with a large brass crown during assembly. It makes a convenient handle for the movement. Lube the setting parts with blue Moebius synthetic grease (Bergeon ref. 6441E). Refer to the tech guide frequently during assembly. Although the tech guide specifies Moebius D-5 for the setting parts, many watchmakers report reduced lubricant spreading when using the blue grease.

It is very important to lube the intermediate setting wheel internally with D-5. The upper and lower wheels of this assembly are not firmly attached together, but have an internal friction surface that must be lubricated. The day and date mechanism cannot be quick set for several hours around midnight. This setting wheel, when properly lubed, will slip when the calendar is quick set around midnight, thus preventing damage to the calendar drive wheels. Oil the lower and upper balance jewels, fit the balance cock and balance wheel to the plate, test the balance for endshake, and correct any hairspring errors at this time. Use the Etachron key (ref. 015595) to adjust the regulator pins and hairspring. Fit the train wheels, new mainspring and barrel, and stop lever to the plate. Fit the operating lever spring to the underside of the train bridge. Oil the lower driving wheel jewel with D-5 and install the train bridge. Oil the lower train wheel pivot of the great wheel (ref. 201.7750), before fitting the driver cannon pinion. Lube the driver cannon pinion with Jismaa 125 grease.

706 S. Hill St., #580
Los Angeles, CA 90014

SMITH SUPPLY HOUSE
LOS ANGELES

Tel: (213) 622-1687
Fax: (213) 488-0922

Watch Materials, Supplies & Tools

Watch Battery Distributor

OSCILLATING WEIGHT AXLE PUNCHERS

#1 FOR CAL. **1530 SERIES**
#2 FOR CAL. **2030 SERIES**
#3 FOR CAL. **3035 SERIES**
3135 SERIES
#4 FOR CAL. **2130 SERIES**
#5 FOR CAL. **2230 & 2235 SERIES**

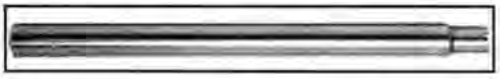





$29.75 / EACH

NEW IMPROVED VERSION

YOUR SUPPLIER OF SPARE PARTS FOR ALL BRANDS OF MECHANICAL AND QUARTZ WATCHES, CLOCKS AND ALARMS

SMITH SUPPLY HOUSE IS NOT AFFILIATED WITH OR SPONSORED BY ROLEX WATCH U.S.A.
THE ROLEX WARRANTY DOES NOT APPLY TO GENERIC REPLACEMENT PARTS SUPPLIED BY SMITH SUPPLY HOUSE

CALL TOLL FREE (800) 23-SMITH

www.smithsupplyhouse.com

Use a jewelling tool to carefully fit the driver cannon pinion to the extended pivot of the great wheel. The great wheel must have endshake and the top surface of the driver cannon pinion must be slightly below the surface of the plate after installing the driver cannon pinion. Oil the train with the oils specified in the tech guide.

Fit the ratchet and crown wheels, install the pallet and bridge, wind the watch slightly, and lubricate the pallet stones before fitting the balance assembly. This is a good time to wind the watch and test its amplitude, beat error, and timekeeping. Make any necessary adjustments now. Fit the hammer cam jumper, chronograph cam, and switch while paying careful attention to the oiling chart.

Fit the chronograph hour recording parts and ratchet wheel driving wheel, again paying careful attention to the oiling chart. Oil the lower reversing wheel jewel in the chronograph bridge before fitting the bridge. Fit the remaining chronograph parts and winding wheels before securing all of them with the automatic device bridge. Replace the two-function clutch spring. Fit the hammer spring, and just as when it was removed, protect the chronograph bridge from the tongue on the spring. Turn the movement over.

Oil the lower pivot of the oscillating pinion. Fit the setting and chronograph parts along with the calendar drive wheels, oiling them as they are assembled, before fitting the date platform. Replace the calendar discs, jumpers, springs, and calendar maintaining plates. Carefully check the winding and setting mechanism. Test the calendar quick set. Do not overlook testing the intermediate setting wheel by trying to quick set the calendar during the date change time near midnight. The clutch mechanism in the setting wheel should slip smoothly. Test the chronograph by starting, stopping, and resetting it numerous times to be certain it functions. A good stereo zoom microscope or strong loupe is very helpful for the next series of checks. Check the adjustment of the finger on the seconds counting wheel. Refer to the tech guide and adjust as required. Test the oscillating pinion's depth into the seconds counting wheel. Adjust if required. Then check the spring of the minute counter jumper. It should be adjusted so that when the chronograph is started and the hammer pulls away from the counter wheels, the minute counter is held in place by the jumper. The minute counter hand should not perceptibly move when the chronograph is started. Adjust the cam as required using ETA minute jumper adjusting key (ref. 131962). Install the oscillating weight after fitting the dial and hands. The tech guide recommends a very small amount of Moebius 9010 oil for the ball bearings. Replace the ball bearings if they are worn or the weight is not freely turning. Pay careful attention to the following parts while servicing this movement:

A. The driver cannon pinion. It may be too loose. Not adjustable, replacement only.
B. The ratchet driving wheel pinion. If loose, replace the wheel.
C. Intermediate setting wheel. Must be internally oiled. Otherwise, it can cause calendar damage.
D. The reversing wheel. A defective wheel will cause the oscillating weight to spin while manually winding the watch.
E. The ball bearing. Excessive wear will cause the weight to scrape on plates.

The following tools are very helpful for servicing this movement:
A. Seitz jeweling tool
B. Etachron key (ref. 015595)
C. Movement rest from Horia (ref. PP-7750). This excellent tool firmly supports the movement while it is being serviced and has integral buttons to operate the chronograph and supports the arbors while the hands are being installed, thus preventing jewel damage.
D. Bergeon levers (ref. 5430)
E. Bergeon wheel puller (ref. 4079-3A)
F. ETA minute jumper adjusting key (ref. 131962)

The wire springs in this movement easily fall out of cleaning baskets. Clean them separately. Replace the barrel and mainspring when servicing this movement. Check the barrel arbor hole in the bridge for wear. Keep a small assortment of spare parts on hand for this movement. Include a barrel, mainspring, driver cannon pinion, ratchet driving wheel, assorted screws, reversing wheel, ball bearing, and all of the wire springs. With these parts at hand, the watchmaker will be able to service this movement without the delay of waiting for spare parts to arrive.

Jack Kurdzionak

You Are Invited

Do you have a solution to a watch or clock repair problem that you want to share with our membership? Do you have a question about a repair problem you would like to ask? I invite you to participate in this column with your suggestions, questions, and comments. It is easy. Just e-mail me at AWCI <magazine@awci.com> or write using the old standby known as the postal service. You can even fax me at 513-367-1414.

I will do my best to help you help the membership. By sharing your questions and suggestions, all of our members can benefit from our combined knowledge and experience. The ideas, tools, techniques, and products presented in this column are suggested by the author and contributing members and are not endorsed by any manufacturer, supplier, advertiser, or AWCI itself.

AWCI Business & Pricing Surveys

The AWCI Business & Pricing Surveys provide statistics on business expenses, rates charged by watchmakers and clockmakers around the country, and much more.



The purpose of the business survey was to learn more about members' business environments, income, and demographics such as age and location. The results for most questions are presented with a national average and a high and low range, and regions are also broken out.

The purpose of the pricing survey was to learn more about members' charges and hours, their business, their income, and their demographics such as age and location. The results for most questions are presented with a national average and a high and low range, and regions are also broken out.

Examples of questions and answers in these surveys:

Income

Q. In 2005 what was your annual gross income?

A. The average income reported was $38,120 and the maximum was $80,000.

Job Opportunities

Q. Do you have enough watchmakers, repairers or technicians to meet consumer demand?

A. Answers ranged from 40% Yes and 33% No. Of those needing additional watchmakers, repairers or technicians, the average need was 3.

Do you want to increase your bottom line? Order your copy today!
Visit AWCI's website (www.awci.com) or call toll free 866-FOR-AWCI (367-2924), ext. 301

SUPER WATCH MATERIAL HOUSE SINCE 1972

FERRELL & CO., INC.

635 Hill Street, #204 Los Angeles, CA 90014

Orders 1-800-523-7534
Information & Inquiries (213) 627-6031
Fax (213) 236-0755
E-mail: ferrellandco@aol.com

PUSH BUTTONS TO FIT TAG HEUER

$35.99 each 4+ $29.99 each



4.45 x 2.50
Yellow or S/Steel



Tag Pusher
4.50 x 2.50 Thread



To Fit CG 1110
3.90 x 2.00 Thread



To Fit CA1210
3.50 x 2.00 Threadless

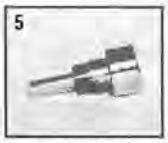

4.50 x 2.75
Thread



4.20 x 2.00
Thread



3.95 x 2.00
Thread



CV2010 & GB6118
4.40 x 2.50 Screwless



4.30 x 2.50
Thread



4.50 x 2.50
Thread



CN1110 & QS8823
4.50 x 2.50 Thread

CALL FOR OUR COMPLETE MOVEMENT & BATTERY PRICE LIST

FERRELL & CO. IS NOT AUTHORIZED BY OR AFFILIATED WITH TAG HEUER, ROLEX, OR CARTIER

By Laurie Penman

Springs

Part 3

Drilling the Spring End

Clearly a hole has to be drilled in the annealed spring before the filing can take place and if you simply plank the spring on a drill table and pull the drill bit down into it, you will probably never make the same mistake again with that hand. Drilling thin material with a relatively large diameter drill is very dangerous unless you set about the job properly.

First, rest the spring on a piece of brass and mark the center of the hole with a large center punch. This leaves a hollow mark and if you turn the spring over, a small upstanding pyramid. File this flat and you reveal a small hole, which makes it easier for the first, small drill to bite in and drill right through. (This method works well for drilling small holes in untreated spring suspensions, it is quick and does not split the spring.)

Prepare a steel strap and drill a hole about 0.1" larger than the hole to be drilled in the spring. Figure 5 suggests suitable dimensions for holding a spring 0.75" wide. Remove the fraze (burr) and make the strap smooth. Lay a piece of flat pine board on the drill table, place the spring on it and the strap on the spring, making sure that the marked hole is visible and centered. Tighten the strap down with a bolt and a wrench or use some other hold-down device.

The first drill is about 0.125" diameter, the second, and final drill, is about 0.3". This assumes that the largest dimension of the stud (anchor width) is about 0.25" diameter (Figure 6). When the hole has been drilled, take it off the drilling table and hold it in a vise to file out the form with a round file. Finish the end with a smooth flat file, or stroke a smooth round file from side to side. In either case there must be a smooth radius linking the end of the form with the rest. Absolutely no corners or nicks left in the periphery, because they will provide places to generate cracks. File the end of the spring to form a semicircle centered on the final position of the stud, this will make it easier to remove the spring if it ever has to be taken out by hand.

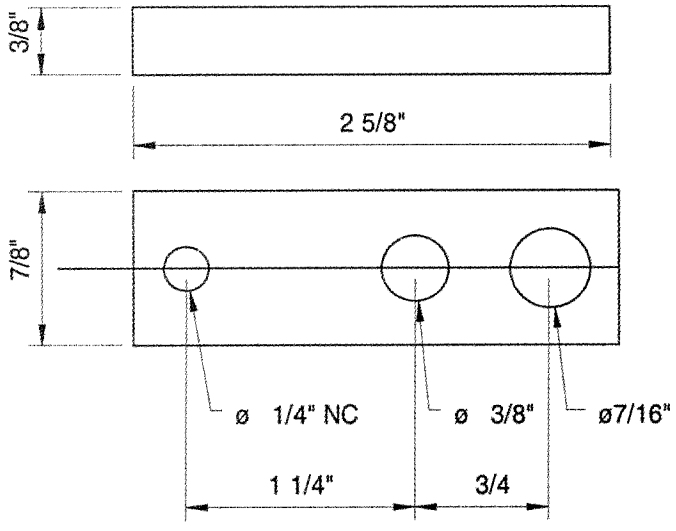

Figure 5

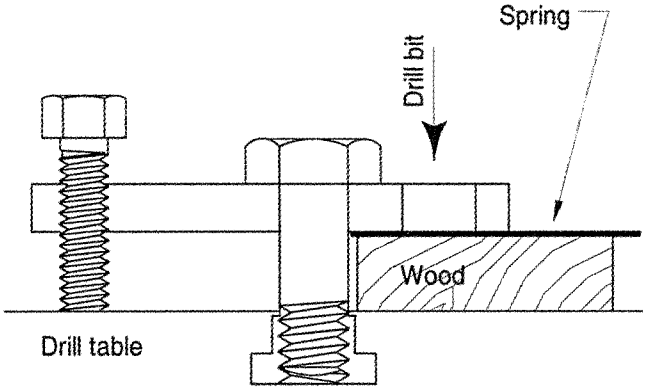

Material is mild steel

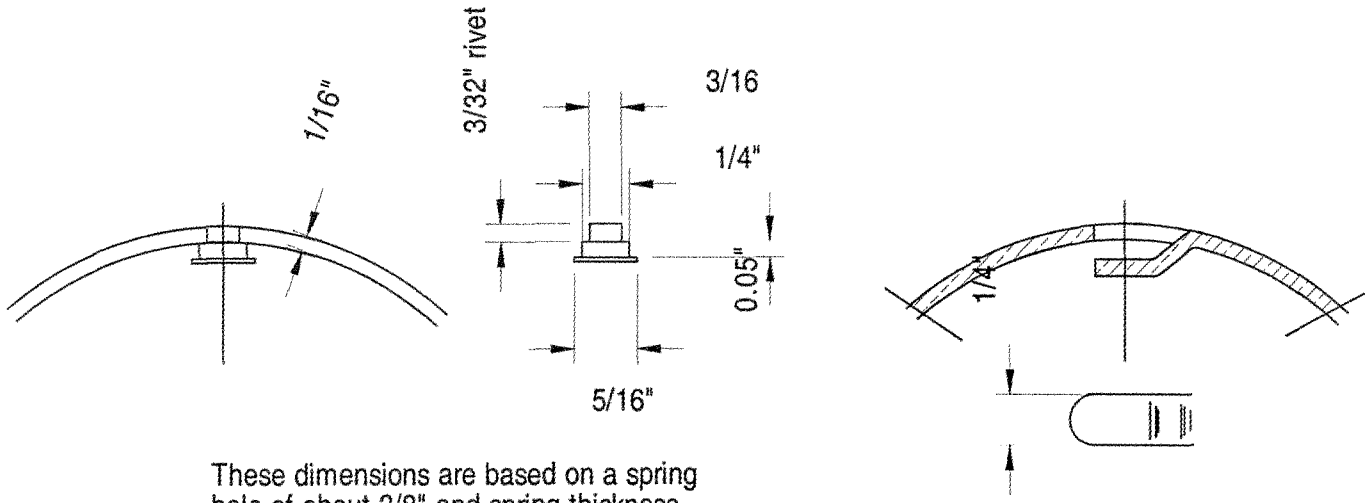

Figure 6

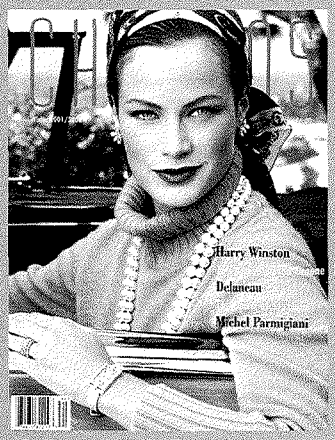

CHRONOS

IF YOU LOVE WATCHES, YOU'LL LOVE CHRONOS

❑ $22.50 – One Year
❑ $42.00 – Two Years
❑ $60.00 – Three Years
Foreign subscribers add $10 per year. (U.S. Funds drawn from U.S. bank only)
❑ Check or money order enclosed
❑ Charge my Visa or MasterCard
Card No. _____
Exp. Date _____
Signature _____
Phone _____
Name _____
Address _____
City _____ State _____
Zip _____ Country _____
Company Name _____
Type of Business _____

Chronos Magazine is published 6 times per year for the connoisseur of luxury timepieces. Each issue presents the finest watches and clocks of today as well as exploring premier vintage collections.



WCR

Watch & Clock Review

THE INDUSTRRY'S MOST-USED PUBLICATION

❑ $19.50 – One Year
❑ $35.00 – Two Years
❑ $50.00 – Three Years
Foreign subscribers add $10 per year. (U.S. Funds drawn from U.S. bank only)
❑ Check or money order enclosed
❑ Charge my Visa or MasterCard
Card No. _____
Exp. Date _____
Signature _____
Phone _____
Name _____
Address _____
City _____ State _____
Zip _____ Country _____
Company Name _____
Type of Business _____

Watch & Clock Review is published 10 times per year and is the industry's most-used publication–the only one in North America devoted to watches and clocks. Get the one convenient source of industry news features including eight annual directory issues.

SEND TO : SUBSCRIPTION DEPARTMENT 2403 CHAMPA ST. DENVER, CO 80205 CALL US AT 303.296.1600

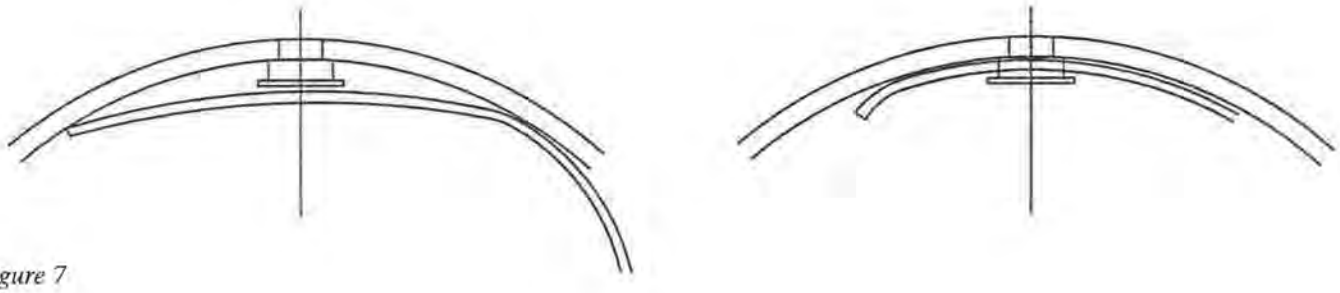

Figure 7

Finally smooth the edges of the semicircle and the form of the hole and polish with emery paper (about 400 grit) and bend the end of the spring with pliers so that it matches the curve of the inside of the barrel for half the barrel's periphery, or slightly smaller. That should ensure that the spring will drop over the stud when inserted and not stand away from it as in Figure 7. A normal clock mainspring does not bend smoothly; by that I mean that it does not adapt a smooth helical curve or spiral. Because of bending moment theory, any flat spring that is bent by a constant bending moment assumes a true circular arc. To persuade a spring to wind into a barrel or onto a winding arbor we have to make it wrap around itself; and that, of course, cannot be a simple circle. It is in fact a series of arcs that get smaller towards the center of the coils (Figure 8). At each change (from one arc to the next) there is a point where the metal is strained past its recovery point (limiting stress), which creates a much smaller arc, and this forms a link between the two (Figure 8).

All very interesting, but why would you want to know this?

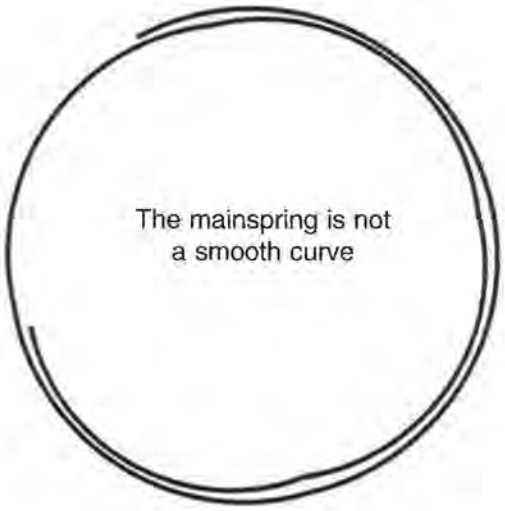

Figure 8

Well first of all, the bending into different arcs with a smaller one linking them, creates a "knuckle" which enters the arc above it and, as the spring winds or unwinds, the knuckle rises and falls as the arcs pass over it. It makes a switchback ride—a roller coaster. Friction between one coil and the next varies as they wind and unwind. If the surfaces are rough or not lubricated properly, a great deal of energy can be lost to friction. This does not mean that a rough spring will not work (I have a main spring from 1704 that proves that it will), but not as effectively as it should losing both energy and smoothness of operation.

The second thing is that the knuckles are stress points. Stress points are prone to failure when corrosion attacks the metal. If the spring was heat treated (stress relieving) after being formed into its coils, the stresses will have been reduced, but we have no way of knowing whether this has been done or not. For this reason it is imperative that a spring is cleaned properly, no acids from that process left and, to make certain, that a neutralizing rinse is used. Most rinses do neutralize any acids left from cleaning, but simple alcohol does not. If you have any doubts, rub the spring with damp baking soda and then rub the soda away before polishing and lubricating. Polishing does not mean imparting a mirror finish but simply getting rid of any roughness by using a fine emery paper (400 to 800 grit). Make sure to wipe it with a cloth to remove emery dust, before lubricating, and do not lay the greasy spring on anything that is not spotlessly clean.

Hermle Movements Needed

The AWCI Board of Examiners needs your help. The 21st Century Clockmaker Certification program is seeking Hermle 1161.8531 movements, 114 cm or 94 cm pendulums, fair condition, no bent shafts, no solder, and no WD-40®. You can donate these to the ELM Charitable Trust and receive a tax deduction and help with AWCI's clock certification material supply all at once!

Please help AWCI and dig through your stock of older items and see if a tax deduction might not be better than the dust they now collect.

Contact Jim Lubic for more information: Toll Free 1-866-FOR-AWCI (367-2924), ext. 310 or e-mail: jlubic@awci.com.

HERMLE • KIENINGER • URGOS
H. HERR • REGULA
from
Butterworth Clocks, Inc.

Why repair when you can replace?
THE LARGEST MOVEMENT SUPPLY IN THE WORLD

FREE PRICE LIST
Phone: 563-263-6759 Fax: 563-263-0428
E-mail: butterworth@machlink.com
Web: www.butterworthclocks.com
5300 59th Ave. W., Muscatine, IA 52761

SAME DAY SHIPPING — TWO-YEAR WARRANTY

Livesay's
Tampa, Florida Inc.

Wholesale Jeweler & Watchmaker Supplies Since 1969



621.010 The Professional's Handbook to Pre-Owned Rolex® Watches, 6th Edition
This book can help you identify genuine and non-genuine Rolex® watches. It is an accumulation of knowledge gained from 25 years experience by the author, Gary Zumbaugh, and other experts from around the world.
Just $40.00



421.530 Chronogrease P125
Excellent for use on today's mechanical chronograph watch movements.
Just $36.50



421.531 Molykote DX Grease
This light colored grease is used with solid lubricants for assembly and long-term lubrication of metallic components. ETA recommends for lubrication of the 251 and 255 series quartz movements. Sold in a 50-gram tube.
Just $22.85



592.020 Gucci Type Case Opener
Plastic handle has a metal tool with a hook end used to open snap type Gucci cases.
Just $9.95

Note: Livesay's Inc. is no way associated with Rolex®; nor does Livesay's Inc. attempt to portray itself as an agent of Rolex®. The above parts are not manufactured by or for Rolex® and does not carry any endorsement from Rolex® implied or otherwise.

Phone Orders
(800) 476-2715
Toll Free 24 Hour FAX Orders
(800) 476-8016
Online Catalog
www.LivesaysInc.com
Email
info@LivesaysInc.com

Prices are in effect until September 30, 2007 or until supplies are depleted.

International Watch Collectors Society

Debuts a new 240-page book showcasing 100 extraordinary mechanical watches

Chronograph to Complication

By Bertram Kalisher



PURCHASE THE *CHRONOGRAPH TO COMPLICATION* BOOK FOR ONLY $50 PLUS SHIPPING & HANDLING

OR JOIN THE INTERNATIONAL WATCH COLLECTORS SOCIETY FOR $100 AND RECEIVE A COMPLIMENTARY COPY OF THE *CHRONOGRAPH TO COMPLICATION* BOOK

❑ ENCLOSED IS MY CHECK FOR $100 FOR THE INTERNATIONAL WATCH SOCIETY MEMBERSHIP AND COMPLIMENTARY BOOK (FREE S&H)

❑ ENCLOSED IS MY CHECK FOR $50 (PLUS $7 S&H, $20 OVERSEAS SHIPPING)

PLEASE MAKE CHECKS PAYABLE & MAIL TO:
INTERNATIONAL WATCH COLLECTORS SOCIETY
244 MADISON AVE., #258 NEW YORK, NY 10016

Name _____ Phone _____

Mailing Address _____

_____

AWCI Member Websites

- **Have you always wanted a website for your business, or are you unhappy with your current website?**
- **Do you feel that your business needs more exposure to your customers?**
- **Do you want a website, but don't know where to start, and assume it would be a costly venture?**
- **Do you just not have the time to mess with it?**

Go to: *awci.companysitecreator.com*

AWCI and Companysitecreator have worked together to offer an opportunity to all members!

It literally takes just a few minutes to build your new site in 5 simple steps from start to finish.

Two packages are offered ($8.95 per month or $18.95 per month), and you are able to see your site before you decide to purchase.

New Members

Arizona
De La Rosa, Pablo—Laveen, AZ

California
Abadjian, Kevork—Los Angeles, CA
Bonnet, Henri—Santa Barbara, CA*
Hoffman, Devon—Martinez, CA
Johorian, Garabet—Los Angeles, CA
Kasparian, Shaun S.—Marina Del Rey, CA
Nguyen, Michael—Redwood City, CA
Sadakian, Aro—San Carlos, CA*
Titizian, Guiragos—Marina Del Rey, CA
Vazquez, Ernesto—Beverly Hills, CA

Florida
Bennett, Jody L.—Jacksonville, FL*
Cabanas, Jorge L.—Hialeah, FL
Moyse, Alexandre—Bay Harbor Is, FL
Rico, Daniel—Miami, FL
Rico, Demetrio—Miami, FL
Tanashian, Al—Orange City, FL*

Illinois
Elkind, Alexander—Glenview, IL
Gallagher, Richard O.—Decatur, IL*
Hierz, John—Verona, IL
Ragabali, Ashiq—Glenview, IL
Ramirez, Ignacio—Chicago, IL

Louisiana
Allain, James Fernand Jr.—New Iberia, LA*

Michigan
Connor, Alex—Troy, MI

New Jersey
Davis, John—Secaucus, NJ*

New Mexico
Gaxiola, Alejandro—Las Cruces, NM

New York
Baade, Karl C.—Port Jefferson, NY
Fulop, Thomas Z.—Massapequa, NY
Landry, E. J.—Rochester, NY*

North Carolina
Guiterrez, Eduardo—Chapel Hill, NC

Rhode Island
Nakhlis, Roman—Cranston, RI
Rodriguez, Laurindo G.—Cranston, RI

South Carolina
Yon, Adelheid M.—Hanahan, SC*

Texas
Abell, Chris—Tyler, TX
Cole, Joe M.—Dublin, TX*
Crumley, Fred—Austin, TX
Endress, Kristopher G.—Plano, TX*
Flores, Tomas—Houston, TX
Lewis, Bill—Fort Worth, TX*
Mueller, Hans—Houston, TX
Pereira, Jerry—Houston, TX
Ridley, Phillip—Arlington, TX
Steele, Jason D.—Taylor, TX
Torres, Miguel—Houston, TX

Washington
Cook, Paula—Lake Stevens, WA

***AWCI welcomes back these individuals who have chosen to re-instate their membership.**



Zantech's compressor system has a unique dual trigger action that is capable of spraying dry filtered air, as well as PlastiCLEAN™ Solvent. Safely dissolve dry oils and other contaminants (without disassembly of the gear train), all with the ease of a foot switch activated system that is quiet enough for a retail environment. The cost of cleaning one movement with the Zantech compressor system averages only 10 cents per movement!

Kit includes:

- **Dual-Action Spray Gun**
- **Qt. PlastiCLEAN™ solvent**
- **2 oz and 3/4 oz Jar with cover**
- **Pair Movement Grippers**
- **Airbrush Holder**
- **Compressor Air-Hose**
- **In-line Moisture Filter**

30.650C (Quiet Compressor & AC foot Switch Included) $699.95



Simply the best cleaning solution for quartz watch movements

13 fl oz Aerosol Can	**$16.95**
1 qt Bulk Liquid	**$24.95**

ZANTECH® INC.
Quartz Watch Supply Specialists Since 1976

7501 N. Harker Dr.
Peoria, Illinois 61615
Orders only: 800-441-7569
Fax: 309-692-8375
E-mail: orders@zantechinc.com
www.zantechinc.com

BULLETIN BOARD

ITEMS STILL NEEDED

Hahl Automatic Clock Co.
AWCI is looking for an instruction manual/service information for a Hahl Pneumatic Clock.

Sonic 4 Ultrasonic Cleaner
Charles Goad, Fairland, OK, is searching for a schematic for a Sonic 4 Ultrasonic Cleaner.

Do you have information regarding this month's requests? Do you need information about one of this month's responses? If so, send your information or requests to: *Horological Times* Bulletin Board; 701 Enterprise Drive; Harrison, OH 45030-1696; Toll-Free: 1-866-367-2924, ext. 307; Phone: (513) 367-9800; Fax: (513) 367-1414; E-mail: dbaas@awci.com

In Remembrance

AWCI has been notified of the passing of the following members:

California
Collison, T. A. — Murrieta, CA

Connecticut
Bystry, Peter — Windsor, CT

Michigan
Fulton, William C. — Mount Clemens, MI

Montana
Ladanye, John — Kalispell, MT

New Mexico
DeAngelis, Guillermo — Rio Rancho, NM

New York
Polk, Irving — Patchogue, NY

Ohio
Bolender, Arnold J. — Dayton, OH

Texas
Bishop, Jack — Pasadena, TX

Wisconsin
Jensen, Garold K. — River Falls, WI

International
Brown, Charles H. — Victoria 3149, Australia

AWCI Member Benefit

Office DEPOT
Taking Care of Business

AWCI strives to bring more value to your association membership. That is why we have teamed with Office Depot to bring your business a better office supply solution. Some of the benefits you can count on are:

- Savings ranging from 10% to 80% on 176 frequently purchased items
- Discounts ranging from 20% to 55% at all Copy and Print centers in every retail store
- 5% savings on all other items*

*Substantial discounts on Office Depot's already low prices for copier paper and toner

Visit AWCI's website, www.awci.com and click on "Members Page" under the "Home" menu and follow the Office Depot link, click on the link to register for the discount.

Note: Office Depot Benefits are available only in the U.S.A.

WHAT'S ON THE AWCI CW EXAM?

1. **Written/Theory** task (essay type questions, calculations, etc.)
2. Using the **Watchmaker's Lathe** (hand-held graver turning operations)
3. Servicing a Modern Swiss **Quartz** wristwatch movement
4. Servicing a Modern Swiss **Automatic** wristwatch movement
5. Servicing a Modern Swiss **Chronograph** wristwatch movement

It is strongly recommended that you read and comprehend the detailed contents of the five (5) points above, in the AWCI Standards & Practices (CW exam emphasized on pages 16 – 24) at the following link:
http://www.awci.com/documents/June2006sandpforwatchmakers.pdf

Or visit *www.awci.com* and click on CERTIFICATION

For further questions you may contact Nancy Wellmann at:
Toll Free 1-866-367-2924, ext. 303
E-mail: nwellmann@awci.com



AWCI Correspondence Course in Clock Repair

Based on the original correspondence course written and administered by Laurie Penman, AWCI's resident clock instructor, this course is constructed to provide information and instruction in a manner that is immediately useful in both learning and practicing clock repair. The course contains 16 lessons. At the completion of each lesson you will receive comments and suggestions from Laurie Penman, and a pass or fail grade. Those who achieve a pass grade in each section will receive a certificate of completion. Mr. Penman will be available to answer questions or offer suggestions to each student.

The AWCI Correspondence Course in Clock Repair package contains all the material and information necessary to successfully learn the fundamentals of clock repair, including *The Clock Repairer's Handbook* by Laurie Penman and a one-year subscription to Steven G. Conover's monthly publication, *Clockmaker's Newsletter*. Course participants will be invited to attend a 2-day meeting at AWCI to confer with Mr. Penman and meet other students.



AWCI Members - $800

Non-members - $925

Contact Nancy Wellmann, AWCI Education Coordinator
E-mail: nwellmann@awci.com
Phone Toll Free 1-866-367-2924, ext. 303 or (513) 367-9800

Academy of Watchmaking Classes

Manuel Yazijian, CMW21 Instructor

AWCI is offering a series of 5-day watchmaking classes. Each 5-day block will cost $600. For additional information, contact Education Coordinator, Nancy Wellmann nwellmann@awci.com or call 1-866-FOR-AWCI (367-2924), ext. 303. Class information is also available online www.awci.com

September 24-28, 2007	Vintage Chronographs - Bernhard Stoeber, Instructor
October 22-26, 2007	Basic Watch Repair, Servicing and Adjusting
November 5-9, 2007	Introduction to Basic Quartz Watches and Quartz Chronographs
January 7-11, 2008	Watchmaker's Lathe I
January 14-18, 2008	Watchmaker's Lathe II
February 4-8, 2008	Basic Watch Repair
February 11-15, 2008	Servicing and Adjusting the Lever Escapement
March 3-7, 2008	Precision Timing and Dynamic Poising
March 10-14, 2008	Modern Automatic Watches
April 7-11, 2008	Basic Quartz Watch and Quartz Chronograph Repair
April 14-18, 2008	Modern Mechanical Chronographs, Servicing and Adjusting

21st Century Certification Exam Schedule

Certified Watchmaker & Certified Master Watchmaker

Visit AWCI's website for complete information on 21st Century Certification. To register for an exam or for more information contact Education Coordinator, Nancy Wellmann at nwellmann@awci.com or call toll free 1-866-FOR-AWCI (367-2924)

September 4-7, 2007	North Seattle Community College	Seattle, WA
October 8-11, 2007	Oklahoma State University	Okmulgee, OK
January 28-31, 2008	AWCI Training Facility	Harrison, OH
February 25-28, 2008	AWCI Training Facility	Harrison, OH
March 24-27, 2008	AWCI Training Facility	Harrison, OH
April 28 - May 1, 2008	AWCI Training Facility	Harrison, OH

Watchmaker's Lathe I

Instructor: Manuel Yazijian, CMW21

January 7-11, 2008

AWCI - Harrison, OH

Purpose

This course is designed to teach the student basic micromechanics skills and all the basics of operating a watchmaker's lathe.

Prerequisites

- Must read chapter 12, of *The Modern Watchmakers Lathe And How to Use It,* by Archie Perkins, prior to attending the course (http://www.watchclockmakers.org/ecomm/proddetail.php?prod=book024)

Course objectives

1. Measuring and measuring tools
2. Tracing and sawing
3. Various methods of filing
4. Drilling
5. Creating line finishes
6. Introduction to the lathe and its care
7. Use of gravers, shapes and cutting geometry
8. Sharpening gravers
9. Turning square shoulders and tapered surfaces
10. Cutting an inside and outside thread
11. Other applications of the lathe e.g. cutting out a balance staff

Watchmaker's Lathe II

Instructor: Manuel Yazijian, CMW21

January 14-18, 2008

AWCI - Harrison, OH

Purpose

This course is a continuation of Watchmaker's Lathe I and the purpose is to teach the student the necessary knowledge and hand skills to manufacture various parts in steel that will be functional in a mechanical watch. e.g. winding stem.

Prerequisites

- Having attended the AWCI courseWatchmaker's Lathe I
- Must read chapter 16, of *The Modern Watchmakers Lathe And How to Use It,* by Archie Perkins, prior to attending the course (http://www.watchclockmakers.org/ecomm/proddetail.php?prod=book024)

Course objectives

1. Measuring and measuring tools
2. Using various formulae
3. Determining the dimensions of missing part(s)
4. Metallurgy
5. Use of gravers, shapes and cutting geometry
6. Sharpening gravers (H.S.S & Carboloy)
7. Heat treating, annealing, hardening, tempering
8. Square filing methods
9. Turning square shoulders and tapered surfaces
10. Cutting threads on steel parts
11. Other applications of the lathe as time permits

For complete course information and a tool list, please visit AWCI's website: www.awci.com
or call Nancy Wellmann, Education Coordinator
(866) FOR-AWCI (367-2924), ext. 303

Horological Association of Virginia Annual Convention

In conjunction with the 2007 Horological Association of Virginia (HAV) Annual Convention in Lynchburg, VA, officers were elected to fill positions on the HAV Board of Directors. HAV officers are: John Enloe, President; Steve Leonard, 1st Vice President; Mike Creasey, 2nd Vice President; Stan Palen, Treasurer; Lloyd Lehn, Secretary; and Lowell Fast, Outgoing President.



HAV Officers: Mike Creasey, Lowell Fast, John Enloe, Steve Leonard, Stan Palen, and Lloyd Lehn.

The 2007 HAV Convention was held April 20-22 in Lynchburg, VA. The convention guest lecturers were Bob Ockenden and Dan Fenwick. Bob provided an excellent program concentrating on English Tall Case Clock Repair. Dan's lecture and group discussion emphasized the co-axial escapements.

The 2007 HAV President's Award was presented to Keith Clark. Keith has been an active and involved member



HAV Annual Convention Attendees

of AWCI, HAV and the NAWCC for many years. During Keith's service to HAV, members benefited from his excellent organizational and leadership skills and technical knowledge, which resulted in outstanding programs and seminars. Keith works on personal clocks for individuals as well as clocks throughout the Washington, DC area including the Curator's Office for the Architect of the U.S. Capitol, U.S. Senate Curator's Office, Alexandria City Hall, Main Reading Room of the Library of Congress, the Old Post Office Pavilion, and many more.

The HAV will be holding their Fall Seminar on October 21, 2007 in Mechanicsville, VA. For more information visit www.havhome.org.



Bill Trapp (left) presents Lowell Fast, outgoing HAV President, with a congratulatory plaque for horological leadership excellence during the past two years.



Keith Clark accepts the 2007 HAV President's Award.

DHL EXPRESS

The American Watchmakers & Clockmakers Association is excited to announce its DHL shipping program for members. DHL brings AWCI members a full suite of domestic and international shipping services, covering over 220 countries and territories around the globe.

Through AWCI's partnership with DHL, members are also eligible for special association member pricing. To find out more about your DHL benefits and set up your account, or if you have questions regarding your current account, please contact the dedicated association hotline at 1-800-MEMBERS (1-800-636-2377, 8 am – 7 pm, ET) or log onto www.1800members.com/awcinet

AWCI Recognizes Long-Time Members

Members: 40-plus years

ALABAMA
Durham, John D. — Montgomery, AL
Smith, Jimmy D. — Decatur, AL

ARIZONA
Kolossa, Adolf — Fountain Hills, AZ
Whelan, Fred E. — Douglas, AZ

CALIFORNIA
Brueggeman, Walter K. — Tehachapi, CA
Creed, Harry C. — Santa Rosa, CA
Davenport, Mark L. — Northridge, CA
Decker, Richard A. — San Jose, CA
Foreman, J.M. — Cambria, CA
Garbe, Bruce R. — South Pasadena, CA
Holub, William C. — Bellflower, CA
Kann, Lee Ambrose — Anaheim, CA
Kelton, Burl — Van Nuys, CA
Putterman, Milton — Petaluma, CA

COLORADO
Bays, Marvin L. — Westminster, CO
Page, Mancel E. — Grand Junction, CO

CONNECTICUT
Krutolow, Alvin — Danbury, CT

FLORIDA
Del Castillo, Julio — Tampa, FL
LeBeau, Leonard J. — Saint Petersburg, FL
Schlueter, Robert L. — Cape Coral, FL
Trujillo, Clodovald — Tampa, FL
Wilsey, Robert L. — Lake City, FL

ILLINOIS
Becker, Gunther A. — Lombard, IL
Blanchard, Laurence A. — Quincy, IL
Craft, George E. — Freeport, IL
DeRuntz, James — Granite City, IL
Jordan, James W. — Maryville, IL

INDIANA
Botkin, William E. — Muncie, IN
Hood, Clarence — Terre Haute, IN
Lohrmann, Robert E. — Rockville, IN
Schaefer, Walter B. — Speedway, IN
Stinnett, Merrill — Marion, IN

IOWA
Bartels, Donald J. — Clinton, IA
Glessner, Curt F. — Waterloo, IA
Kurka, Richard C. — Fairfield, IA
Roth, Milton E. — Waterloo, IA

KANSAS
Sutton, Lionel — Ottawa, KS

LOUISIANA
Lindsay, Donnie R. — Alexandria, LA

MARYLAND
Craig, Stanley H. — Hagerstown, MD

MASSACHUSETTS
Hersey, Walter — Reading, MA
Perry, Edmund — Taunton, MA
Ramos, Albert — Fairhaven, MA

MICHIGAN
DeLorenzo, Tancredi — Grosse Pointe, MI
Pickett, Lee E. — Ann Arbor, MI
Tuthill, F.S. — Albion, MI

MINNESOTA
Morneau, John B. — Saint Paul, MN
Nelson, Robert A. — Richfield, MN
Pary, Robert A. — New York Mills, MN

MISSISSIPPI
Wimberly, A. L. — Mccomb, MS

MISSOURI
Grayson, David Michael — Festus, MO
Porter, Robert D. — Ellisville, MO

MONTANA
Brown, Thomas G. — Polson, MT
House, Alvin J. — Hamilton, MT
LeDuc, Gorvan — Laurel, MT
Sharples, Franklin A. — Chinook, MT

NEW JERSEY
Chessari, Emil J. — West New York, NJ
Coats, John J. — Newton, NJ
Loeser, Henry — Fort Lee, NJ
Pobereskin, Isadore — Marlboro, NJ

NEW MEXICO
Buttner, Karl — Albuquerque, NM

NEW YORK
Doerrer, Frederick W. — Dolgeville, NY
Graziano, Philip — Hudson, NY
LaDue, Dale — Rochester, NY
Rapp, Harold L. — Roslyn, NY

NORTH CAROLINA
Book, Kenneth A. — Aberdeen, NC
Dietzel, Charles F. — Brevard, NC
Lamb, James T. — Wilson, NC
Smith, Julian J. — Warrenton, NC
Strickland, Leaman — Wendell, NC

OHIO
Broughton, James H. — Columbus, OH
Fulkerson, Frank W. — Toledo, OH
Jaffee, Monroe J. — Toledo, OH
Kiser, Willard — Ironton, OH
Lingenfelter, Jacque R. — Loudonville, OH
Rife, Thomas F. — Dayton, OH
Smith, Leslie L. — Cincinnati, OH
Sneary, Richard — Port Clinton, OH
Stevens, Milton C. — North Bend, OH

OKLAHOMA
Denney, K.C. — Tulsa, OK
Hawkins, Bennie C. — Oklahoma City, OK
Smith, Byron — Texhoma, OK

PENNSYLVANIA
Allalunis, Simon — Pittsburgh, PA
Bender, Paul E. — Belleville, PA
Cehelsky, George J. — Bethlehem, PA
Kemmerer, Jack — Franklin, PA
Markley, Robert C. — Willow Street, PA
Parker, C. Thomas — Carlisle, PA
Sollenberger, Herbert P. — Mechanicsburg, PA
Verruni, Joseph C. — Plymouth Meeting, PA

RHODE ISLAND
Jacobson, Bernard — Providence, RI
Paul, Edward F. — Warwick, RI
Zompa, Joseph J. — Providence, RI

SOUTH CAROLINA
Buyck, Fred J. — Columbia, SC

TENNESSEE
Haley, Andrew E. — Memphis, TN

TEXAS
Brice, Bobby E. — Bay City, TX
Dorer, Dick — Fredericksburg, TX
Fulwiler, Jack H. — Abilene, TX
Horne, H. R. — McAllen, TX
McCarty, James W. — Carrollton, TX
Neill, Harold B. — Nacogdoches, TX
Walton, Carey E. — Dallas, TX

VIRGINIA
Bruckhart, Robert G. — Richmond, VA
Davis, Earl O. — Winchester, VA
Fisk, Paul F. — Charlottesville, VA
Hardy, Clarence E. — Roanoke, VA
Hartman, Ewell D. — Richmond, VA
Merten, William M. — Norfolk, VA
Palen, Stanleigh W. — King George, VA
Rudibaugh, Richard J. — Chesapeake, VA

WASHINGTON
Ghan, David L. — Seattle, WA
Sandberg, John R. — Wenatchee, WA

WISCONSIN
Case, Harold L. — Waukesha, WI
Jaeger, Gerald G. — Sheboygan, WI
Johns, C. R. — Fountain City, WI

CANADA
Zoller, Horst R. — Saskatoon, SK

Members: 30 - 39 years

ALABAMA
Lovelady, Ronny A. — Decatur, AL
Mielke, Daniel Howard — Selma, AL

ALASKA
Augustin, Eugene E. — Fairbanks, AK

ARIZONA
Alchenberger, W. — Green Valley, AZ
Battain, Remy — Kingman, AZ
Bjornson, Stan — Phoenix, AZ
Caldwell, Timothy — Scottsdale, AZ
John, Peter K. — Phoenix, AZ
Lucic, Christopher A. — Oracle, AZ
Lynes, Willis L. — Kingman, AZ
Mast, Melvin — Morristown, AZ
Minard, Dayton A. — Sierra Vista, AZ
Smith, Terry O. — Tucson, AZ
Steinbach, Walter — Tempe, AZ
White, Thomas H. — Phoenix, AZ

ARKANSAS
Carter, Theron C. — Mountain Home, AR
Ellis, Donald D. — North Little Rock, AR
Lacey, Vernon — Paragould, AR

CALIFORNIA
Banks, A.C. — Mariposa, CA
Bartow, S. A. — Fortuna, CA
Bennett, A.L. — Grass Valley, CA
Bernecker, Ludwig — San Francisco, CA
Bertrand, Thomas N. — Fair Oaks, CA
Biagi, Louis A. — Oakland, CA
Brouzes, Keith — Modesto, CA
Edison, Mark J. — Fair Oaks, CA
Frohlich, Karl Heinz — Simi Valley, CA
Giggiberger, Jose — Santee, CA
Highfill, Paul — Santa Maria, CA
Ikawa, Jack — Fresno, CA
Johnston, Daryl — Chico, CA
Kalincsak, Imre — Riverside, CA
Lieu, Chi D. — San Francisco, CA
Mazza, Richard A. — Beverly Hills, CA
Mendoza, Bernardo E. — San Jose, CA
Mizushima, Henry H. — Sacramento, CA
Rigsby, Kenneth Donald — Los Angeles, CA
Roper, Harvey W. — Auburn, CA
Sanin, Gonzalo — Los Angeles, CA
Sweetser, Larry D. — Fairfield, CA
Vystrcil, Karel — Newark, CA
Wong, George B. — Berkeley, CA
Wylie, Hanse E. — Orange, CA
Yalenian, Varoujan — Los Angeles, CA

COLORADO
Cooper, David E. — Boulder, CO
Fetcher, William M. — Steamboat Springs, CO
Mattson, David — Colorado Springs, CO

CONNECTICUT
Crump, Kirt H. — Madison, CT
Curley, William J. — Waterbury, CT
Pavkov, Raymond E. — North Haven, CT
Riggio, Tony — Westport, CT
Tyler, T.R. — Mystic, CT

DELAWARE
Escheu, Alfred — Wilmington, DE
Woods, John Paul — Bethany Beach, DE

FLORIDA
Aretz, Ronald G. — Sarasota, FL
Bernstein, Daniel — Hollywood, FL
Codella, Michael — Coral Gables, FL
Crider, Paul H. — Altoona, FL
Dunlap, James R. — Sarasota, FL
Eichermueller, Max — Cape Coral, FL
Gereg, Samuel W. — Niceville, FL
Lareau, Maurice D. — Longwood, FL
LeBeau, Richard J. — Saint Petersburg, FL
Luce, John W. — Tampa, FL
Maggard, Grover Douglas — Tampa, FL
Pedzy, Edward A. — Jensen Beach, FL
Pullin, Thomas M. — Venice, FL
Roscinski, Edward J. — Tampa, FL
Waalewyn, Anthonius — Palm Beach, FL
Wiles, Christopher — Naples, FL
Worley, Orville — Pensacola, FL
Yore, John W. — Riverview, FL

GEORGIA
Cash, Ned J. — Brunswick, GA
Davenport, Larry G. — Roswell, GA
Marsh, Dewey B. — Augusta, GA
Painter, Madison H. — Elijag, GA
Sanger, Leon A. — Brunswick, GA
Sharp, Michael A. — Griffin, GA
Wilson, Gary D. — Lawrenceville, GA

HAWAII
Goda, Ben — Honolulu, HI

IDAHO
Grover, F. Martell — Rexburg, ID
Hollingsworth, Gene I. — Emmett, ID

ILLINOIS
Bruce, Gary — Princeton, IL
Cavarretta, Samuel — Carbondale, IL
Dobbles, Paul G. — Bismarck, IL
Donovan, Jack — Normal, IL
Dowell, James W. — Pana, IL
Eckel, Allan D. — Champaign, IL
Graska, James C. — Lansing, IL
Grigsby, C. Smith — Mount Carmel, IL
Gustafson, Robert G. — Rock Island, IL
Horstmann, Paul — St. Anne, IL
McCutcheon, Raymond W. — Chicago, IL
Niwa, Frank — Countryside, IL
Ramsey, Charles L. — Decatur, IL
Richardson, Mark W. — Mendota, IL
Smith, Bernard W. — Decatur, IL
Spinner, Steven — Chicago, IL
Young, Marc C. — Peoria, IL

INDIANA
Bradley, Robert B. — Brookville, IN
Christianson, David A. — Kendallville, IN
Heilman, Philip K. — Indianapolis, IN
Hoellein, Rudolf — Indianapolis, IN
Makowski, Steven — Bluffton, IN
Myers, Stephen B. — Wabash, IN
Settle, Steven D. — Bloomington, IN
Shirey, Leslie R. — Syracuse, IN
Vance, Ray T. — Lawrence, IN

IOWA
Manges, Robert E. — New Hampton, IA
Saboe, Ronald — West Union, IA
Wilshire, Howard — New Hampton, IA
Wiltgen, Ervin J. — Algona, IA

KANSAS
Kenzy, Layne — Winfield, KS
Rea, Jack C. — Wichita, KS
Spahr, Karen — Oberlin, KS

KENTUCKY
Alexander, Jon W. — Louisville, KY
Baker, Barry J. — Louisville, KY
Thomas, Paul J. — Louisville, KY

LOUISIANA
Casso, Kenny Raphael — Baton Rouge, LA
Wade, C.C. — Bogalusa, LA

MARYLAND
Cherry, Ray F. — Baltimore, MD
Ecker, Ralph G. — Boyds, MD
Farmer, Todd A. — Hagerstown, MD
Fribush, Samuel M. — Reisterstown, MD
Graves, J. Rodney — Salisbury, MD
Kincaid, Gerald D. — Baltimore, MD
Kong, Ching — Derwood, MD
Nicholson, William E. — Huntingtown, MD
Smith, C.W. — Derwood, MD

MASSACHUSETTS
Ditello, James S. — Pittsfield, MA
Glaser, Robert — Hanover, MA
Marcus, Barry J. — Milford, MA
Mastromattei, Antonio — Revere, MA
Meek, Jonathan F. — Amherst, MA
Tanguay, Brian P. — Gardner, MA

MICHIGAN
Altounian, Manouk — Livonia, MI
Braekevelt, Donald G. — Fraser, MI
Culbert, Steven J. — Ft. Gratiot, MI
DuBry, Kathleen M. — Tecumseh, MI
Jerue, Jerry L. — Climax, MI
Mikolas, Randy — Menominee, MI
Nyman, Eric — Escanaba, MI
Sheidler, Alan R. — Rochester, MI
VanSweden, John M. — Kalamazoo, MI
Winarski, John — Fraser, MI
Young, David L. — Oscoda, MI
Zito, Thomas — Kalamazoo, MI

MINNESOTA
Albers, Terence D. — Long Lake, MN
Arlo, David W. — Cannon Falls, MN
Gould, William B. — Glencoe, MN
Meffert, Raymond A. — Arlington, MN
Redman, Richard G. — Rochester, MN
Streed, Donovan P. — Waseca, MN
Tuttrup, Terry L. — Waseca, MN

MISSISSIPPI
Bossen, Thomas J. — Brandon, MS
Rawls, Winford — Tylertown, MS

MISSOURI
Brown, Harlan C. — Bolivar, MO
Franke, Joe — Columbia, MO
Martin, John S. — Jefferson City, MO
Wrigley, Eugene C. — Kansas City, MO

MONTANA
Grocholski, Gary W. — Billings, MT
Miller, Robert A. — Billings, MT

NEBRASKA
Jones, Joe — Auburn, NE
Kumor, Frank J. — Bellevue, NE
Robinson, James E. — Kimball, NE

NEVADA
Sadilek, James R. — Carson City, NV

NEW HAMPSHIRE
DeCook, John W. — Claremont, NH

NEW JERSEY
Berthoud, Bernard — Long Branch, NJ
Gibson, Robert S. — Hammonton, NJ
Mattice, Virginia S. — Medford, NJ
Murray, Thomas H. — Blackwood, NJ
O'Leary, Pat — Wayne, NJ
Richter, Paul — Fairlawn, NJ
Tomaszeski, Michael J. — Belmar, NJ

NEW MEXICO
Moore, Michael E. — Albuquerque, NM

NEW YORK
Bell, Thomas E. — Bethpage, NY
Bie, Paul R. — Commack, NY
Freedman, Jack — Brooklyn, NY
Gordon, Ronald — New York, NY
Hanley, Patricia A. — Rochester, NY
MacDonald, Daniel K. — Freeport, NY
McNeil, Patrick — Norwich, NY
Spicknall, Cameron C. — Elmira, NY
Wadsworth, Paul D. — Hilton, NY
Zamora, Alfonso — Buffalo, NY
Zimmermann, Richard — Tonawanda, NY

NORTH CAROLINA
Aponte, Emilio — Newport, NC
Campbell, James A. — Lowell, NC
Dagenhart, Roy — Harrisburg, NC
Deitz, William R. — Hickory, NC
Hall, Gary Wayne — Clinton, NC
Longberg, Keith — Concord, NC
Matthews, Edward C. — Holly Springs, NC
Rondinone, David J. — Kernersville, NC
Shuping, Mack R. — Winston Salem, NC
Yokeley, Chris — Thomasville, NC

OHIO
Cooper, David M. — Worthington, OH
Dulmage, James G. — Columbus, OH
Grove, James H. — Granville, OH
Huss, Norman C. — Sylvania, OH
Johnson, William H. — Tallmadge, OH
McKinney, Charles F. — Carlisle, OH
Montgomery, Jacob E. — Union, OH
Riggs, James J. — Bryan, OH
Rinker, Carl G. — Atwater, OH
Shafer, David G. — Cincinnati, OH
Troyer, Monroe L. — Sugarcreek, OH
West, John E. — Norwood, OH

OKLAHOMA
George, Horace A. — Oklahoma City, OK
Mullican, Larry J. — Oklahoma City, OK

OREGON
Fleming, Theodore S. — Eugene, OR
Jacobs, David A. — Beaverton, OR
Keller, Stevan T. — Bend, OR
Lint, Clifford A. — Bandon, OR
Peterson, Randall E. — Heppner, OR

PENNSYLVANIA
Baer, Earl E. — Kutztown, PA
Bishop, Robert F. — Glenshaw, PA
Chellman, Alva C. — Port Matilda, PA
Keck, John F. — Port Matilda, PA
Koontz, Bernard — Carlisle, PA
Kucharczuk, John B. — Allentown, PA
Leitzel, Ceylon R. — Myerstown, PA
Springman, Roy E. — Montoursville, PA
Teisher, Richard T. — Sunbury, PA

SOUTH CAROLINA
Baier, Peter D. — Hilton Head, SC

SOUTH DAKOTA
Barfoot, Kenneth M. — Custer, SD

TENNESSEE
Cline, Walter J. — Memphis, TN
Richards, Dennie Bob — Germantown, TN
Williams, Burkett — Athens, TN

TEXAS
Alemany, Peter G. — San Angelo, TX
Anderson, Curtis M. — San Antonio, TX
Burckhardt, Fred S. — Fort Worth, TX
Cole, James A. — Tyler, TX
Conner, Ben F. — Houston, TX
DuBois, James B. — Magnolia, TX
Gage, Rex A. — Decatur, TX
Hada, Eugene B. — New Braunfels, TX
Hagle, Robert L. — Dallas, TX
Ingram, R. Bruce — La Marque, TX
Kiser, George H. — Georgetown, TX
Rogers, Tim — Sinton, TX
Schultz, Charles — San Antonio, TX
Warner, Dennis J. — Cedar Park, TX
Wingate, Robert M. — Dallas, TX

UTAH
Fulks, James K. — Farmington, UT

VIRGINIA
Alabaster, John — Midlothian, VA
Cho, Stephen Y. — Mc Lean, VA
Clark, Keith L. — Springfield, VA
Culotta, Paul W. — Hampton, VA
Graves, J. Rodney — Norge, VA
Harris, Donald R. — Bluefield, VA
Lanum, Lewis S. — Danville, VA
Mister, Thomas H. — Virginia Beach, VA
Pellmann, Mark R. — Ashland, VA
Reha, William J. — Virginia Beach, VA
Singh, Surinder — Fairfax, VA
Sobel, Donald J. — Vienna, VA
Soukup, Charles F. — Richmond, VA
Tompkins, Lemuel A. — Ashland, VA

VIRGIN ISLANDS
Rebmann, Edward — Christiansted, VI

WASHINGTON
Campbell, Ralph D. — Issaquah, WA
Day, Stanley G. — Freeland, WA
Door, Wes — Kennewick, WA
Eberhart, William R. — Bellevue, WA
Macomber, Robert L. — Sequim, WA
Pounder, C. J. — Spokane, WA
Runciman, John — Seattle, WA
VanVleet, Donald G. — Tacoma, WA
Varner, J. Brian — Seattle, WA
Wilkins, W. E. — Vancouver, WA

WISCONSIN
Aagaard, Jerry L. — Salem, WI
Bergey, Mark O. — Whitewater, WI
Biederman, William I. — Sparta, WI
Debbink, Jeff — Cedar Grove, WI
Doolittle, Mark — La Crosse, WI
Gardner, Glenn D. — Madison, WI
Gerber, Michael L. — Sun Prairie, WI
Kania, Eugene — Milwaukee, WI
Kent, Raymond — Racine, WI
Leeseberg, Kenneth K. — Montello, WI
Nett, Don — Appleton, WI
Nummi, Harry R. — Superior, WI
Pederson, Greg — Eau Claire, WI
Sambs, Raymond J. — Rhinelander, WI
Sheppard, Eugene F. — Janesville, WI
Smiles, Allan J. — Ashland, WI
Smith, Joseph M. — Racine, WI
Trissel, Richard P. — West Allis, WI

WEST VIRGINIA
Hughes, Stephen T. — Spencer, WV

WYOMING
Blakely, Mabel G. — Lander, WY

CANADA
Barthau, David — Stouffville, ON
Buckley, Peter H. — North York, ON
Cosby, Michael G. — Toronto, ON
Nunes, Manuel — Kitchener, ON
Riley, David C. — Kingston, ON
Webb, Michael B. — Toronto, ON

INTERNATIONAL
Drader, Frank — E. Sussex, United Kingdom
Mora, Rodolfo D. — Panama 5, Panama
Richardson, S. H. — Waiuku, New Zealand
Switzer, Charles Wm. — Victoria, Australia

Members: 20 - 29 years

ALABAMA
Chandler, David W. — Jasper, AL
Hua, Thomas — Anniston, AL
Prickett, Joseph C. — Jacksonville, AL
Swafford, John W. — Madison, AL

ARIZONA
Arnold, Jack A. — Surprise, AZ
Baumbach, Richard A. — Phoenix, AZ
Baxter, John M. — New River, AZ
Berger, Steven — Scottsdale, AZ
Bunkelmann, Dick — Kingman, AZ
Burkey, Roy B. — Tucson, AZ
Campagne, Jay — Tucson, AZ
Di Stefano, Rosario — Scottsdale, AZ
Faier, Jerry M. — Glendale, AZ
Neblett, W. P. — Tucson, AZ
Rich, Michael J. — Tucson, AZ
Van Kempen, Willem S. — Vail, AZ
Zander, Leroy E. — Prescott, AZ

CALIFORNIA
Allen, Don M. — Benicia, CA
Armentrout, Dean — Laguna Beach, CA
Bedrossian, Barrett — Glendale, CA
Bernard, Lawrence E. — San Francisco, CA
Buster, Donald D. — Huntington Beach, CA
Butterfield, D.E. — Oakdale, CA
Chang, Enrique S. — San Ramon, CA
Dabrowski, Juliusz — San Francisco, CA
Davis, Charles E. — La Verne, CA
Davy, R .G. — La Crescenta, CA
Dellamonica, J. M. — Valley Springs, CA
Doyle, Michael J. — Sacramento, CA
Dudley, Charles G.K. — Reedley, CA
Fong, Joseph — Daly City, CA
Gao, Genway — Campbell, CA
Gravenkamp, David A. — Yreka, CA
Gunalp, Asim M. — San Diego, CA
Heyler, Emil — San Jose, CA
Joksch, Dennis P. — Marysville, CA
Kita, Shig — Napa, CA
Kroker, Donald — Fresno, CA
Krupnick, Igor — LaJolla, CA
Lantz, Stone J. — San Francisco, CA
Loeb, Alexander G. — Newport Beach, CA
Manis, Steven — Pacifica, CA
McPherson, Donald M. — Petaluma, CA
Miller, David T.A. — Camino, CA
Murray, Michael P. — Gardena, CA
Nim, Lee Hung — Redwood City, CA
Peischl, Robert F. — Rio Linda, CA
Petersen, Wayne — Sonoma, CA
Price, David — Chester, CA
Public Library — Los Angeles, CA
Puthuff, Harley H. — Petaluma, CA
Rider, Allison L. — Watsonville, CA
Rider, Ron — Watsonville, CA
Rolland, Earl F. — Pacifica, CA
Rybicki, Louis — Solvang, CA
Uchida, Kingo — Port Hueneme, CA
Volpato, Ulis Filho — San Diego, CA

COLORADO
Albert, Frank — Golden, CO
Binsfeld, Robert E. — Lafayette, CO
Brown, William T. — Colorado Springs, CO
Burrows, Thomas A. — Grand Junction, CO
Hurly, John — Denver, CO
Kimberlin, Ron — Lakewood, CO
Miller, Jeffrey C. — Denver, CO
Naleski, Kip — Colorado Springs, CO
Oswald, Llewellyn K. — Broomfield, CO
Phillips, Rodney E. — Fort Collins, CO
Soraci, Paul — Loveland, CO
Tanke, Karl R. — Littleton, CO
Williams, James E. — Cortez, CO
Zaltsberg, Felix — Denver, CO

CONNECTICUT
Gaignat, John — South Windsor, CT
Galasso, Vincenzo — Hamden, CT
Haynes, Bruce A. — Torrington, CT
Jahnke, Paul W. — Monroe, CT
Koulmey, Rene J. — Woodbury, CT
Meunier, David J. — Putnam, CT
Mills, Robert J. — Ivoryton, CT
Ohr, Andrew L. — Wallingford, CT
Thurston, Dwight W. — Canton, CT
Zieroth, Elmer A. — Durham, CT

DELAWARE
Koch, Bernard C. — Wilmington, DE

DISTRICT OF COLUMBIA
Lynn, Joel J. — Washington, DC

FLORIDA
Aguilar, Adriano — Palm Springs, FL
Blanchard, Arthur — Webster, FL
Bragman, David — Lake Worth, FL
Bransford, Thomas — Deland, FL
Bucknam, Gordon D. — Indialantic, FL
Buerkle, Walter — Naples, FL
Carbonneau, Robert — Pensacola, FL
Erickson, Eric J. — Jacksonville, FL
Foshee, Clyde R. — Lakeland, FL
Frazier, Maurice W. — Jacksonville, FL
Genovese, Anthony — Fort Myers, FL
Greene, Clifford R. — Cantonment, FL
Heisler, Scott — Winter Park, FL
Hougham, Fred C. — Ormond Beach, FL
Leavitt, Robert G. — West Palm Beach, FL
Leto, Salvatore — New Port Richey, FL
Liebman, Melvin — Port Saint Lucie, FL
Nielsen, Kurt — Cape Coral, FL
Nisi, Michael J. — New Port Richey, FL
Parigian, Ernest — Hollywood, FL
Polachek, Barton R. — Orlando, FL
Ramirez, Antonio — Homestead, FL
Sodano, Antonio — Palm Beach Gardens, FL
Spivey, Paul M. — Archer, FL
Strader, William S. — Wimauma, FL
Tilem, Joel — Boca Raton, FL
Tope, Ernest R. — Tampa, FL
Trittmacher, Lothar — Jacksonville, FL
Wright, Leo A. — Vero Beach, FL

GEORGIA
Ariail, David — Decatur, GA
Judy, Michael W. — Warner-Robins, GA
Roy, Richard J. — Villa Rica, GA
Sidebotham, Thomas E. — Savannah, GA
Sussman, Hy — Augusta, GA
Womble, Ashley — Marietta, GA

HAWAII
Alhadeff, Rick — Honolulu, HI
Chang, Paul — Honolulu, HI
Dier, Bernard R. — Waipahu, HI
Kawafuchi, Roy S. — Honolulu, HI

IDAHO
Spinden, Robert — Nampa, ID

ILLINOIS
Born, Alfred — Decatur, IL
Buyer, Ralph C. — Freeport, IL
Casstevens, Rex — Saint Charles, IL
Dickerson, Kent — Highland, IL
Foster, Joseph E. — Eureka, IL
Franklin, Leonard M. — Edgewood, IL
Gardner, David M. — Urbana, IL
Grau, Wesley — Gurnee, IL
Hinrichsen, Mark — Eureka, IL
Houk, Tamara — LaGrange, IL
Irvin, Bert G. — McLeansboro, IL
Iverson, Roland R. — South Elgin, IL
Johnston, Charles H. — Cobden, IL
Kwiatkowski, Paul T. — Grant Park, IL
LaChapelle, James T. — South Elgin, IL
Maneke, Charlie — Alton, IL
Mikolite, Kent — Chicago, IL
Mulliken, David F. — Champaign, IL
Palmer, Robert — Lombard, IL
Partington, Joe — Oaklawn, IL
Paul, Steven — Glen Carbon, IL
Ruschke, Lawrence J. — Crystal Lake, IL
Stephens, David L. — Palatine, IL
Will, Gery S. — Herrin, IL

INDIANA
Anderson, Herbert A. — Madison, IN
Caddell, James P. — Frankfort, IN
Caesar, Robert C. — New Albany, IN
Grout, Randall — Valparaiso, IN
Guentert, Andrew — Crown Point, IN
Hays, Rob — Bloomington, IN
Hopman, Patrick — Elkhart, IN
Huntington, Dale E. — Greensburg, IN
Jackson, Daniel C. — Pendleton, IN
Jones, Joseph A. — Indianapolis, IN
McGuire, Derek — Logansport, IN
Moore, J. William — Lebanon, IN
Moser, John — Elwood, IN
Murray, Todd E. — Muncie, IN
Sweigart, David A. — Angola, IN
Wampler, Ernest — North Manchester, IN
Ward, Aubrey E. — Indianapolis, IN
Wesenberg, Dan — Zionsville, IN
Wise, Robert D. — Indianapolis, IN

IOWA
Bartels, Daniel J. — Clinton, IA
Butterworth, Mark A. — Muscatine, IA
Clay, Tex A. — Lisbon, IA
Granzow, Harry J. — Sioux City, IA
Nelson, Tom R. — Spencer, IA
Shedd, John L. — Des Moines, IA

KANSAS
Drake, J. N. — Ottawa, KS
Mohr, Robert L. — Manhattan, KS
Schorr, Ron — Lawrence, KS
Truong, Tinh Chi — Lawrence, KS
Westerman, Elmer A. — Hillsboro, KS

KENTUCKY
Benton, James V. — Louisville, KY
Bosse, Michael J. — Mount Olivet, KY
Bryant, Robert J. — Louisville, KY
Hibbard, Leo W. — Lexington, KY
Sims, Gilbert E. — Owensboro, KY
Whitmer, Bernie D. — Central City, KY

LOUISIANA
Andrews, Charles S. — Zachary, LA
Chaney, Robert E. — Baton Rouge, LA
Meza, Robert — Shreveport, LA
Romano, Joseph G. — Gretna, LA

MAINE
Balzer, Richard — Freeport, ME
Becker, Terry L. — Kennebunk, ME
Both, William — Waldoboro, ME
Goodrich, Walter — Houlton, ME
Guyot, Claude E. — Portland, ME
Moran, Robert G. — Bailey Island, ME
Morgan, Calvin E. — Brunswick, ME

MARYLAND
Brown, John W.E. — Thurmont, MD
Cooper, William G. — Royal Oak, MD
Davis, Malcolm D. — Hagerstown, MD
Novak, Blake — Silver Spring, MD
Novik, Fima — Silver Springs, MD
Simpson, Paul D. — Temple Hills, MD
Spath, Daniel A. — Ellicott City, MD
White, Fred T. — Clinton, MD

MASSACHUSETTS
Aspeslagh, Gilbert M. — North Andover, MA
Duggan, Paul — Chelmsford, MA
Kaloyanides, Stephen — Ipswich, MA
Kogut, Stanley — Wilbraham, MA
Kurdzionak, Jack — Stoneham, MA
Lannon, L. Wayne — Dracut, MA
Lehmann, Albert G. — Holyoke, MA
Maresco, Michael A. — Norwood, MA
Peghiny, James W. — Auburndale, MA
Plummer, Nancy L. — Milton, MA
Scinto, Gregory D. — South Orleans, MA
Sharp, Wendell M. — Yarmouth Port, MA
Smith, Gail M. — West Dennis, MA

MICHIGAN
Agius, Oscar — Grosse Ile, MI
Anderson, Norman J. — Dearborn, MI
Celani, David — Vassar, MI
Collins, John — Redford, MI
Dittmar, Grant E. — Petoskey, MI
Foster, Robert R. — Muskegon, MI
Goulasarian, Hamas — Carleton, MI
Herbert, William P. — Grosse Pointe, MI
Mandrick, Wilfred P. — Levering, MI
Murphy, Pat — Muskegon, MI
Nestell, Michael — Frankenmuth, MI
Reed, Claude — North Adams, MI
Van Tiem, Arnold — Sterling Heights, MI
Yax, Donald — Howell, MI
Young, David L. — Oscoda, MI

MINNESOTA
Bohrer, Robert T. — Cosmos, MN
Burns, Tom — Inver Grove Heights, MN
Gustafson, Burch — White Bear Lake, MN
Johnson, Dale W. — Saint Paul, MN
Krueger, Donn — Minneapolis, MN
Ockenden, Bob L. — Plymouth, MN
Robins, Bruce A. — Saint Paul, MN
Sandager, Charles K. — Albert Lea, MN
Wagenius, Terry — St. Cloud, MN
Weigel, William J. — Wayzata, MN

MISSISSIPPI
Dunipace, Joel — Ocean Springs, MS

MISSOURI
Boucher, Larry W. — Peculiar, MO
Emrich, Oran S. — Kansas City, MO
Engemann, Annette L. — Washington, MO
Good, Robert J. — Brentwood, MO
LaRue, Delbert — Sweet Springs, MO
Lawfer, Rex — Mexico, MO
Runtz, Joe — Saint Louis, MO

MONTANA
Luedke, Charles — Billings, MT

NEBRASKA
Wolfe, David — Lincoln, NE

NEVADA
Tanner, Ray D. — Las Vegas, NV
Weeks, Ronald E. — Virginia City, NV
Wilt, Carl — Sparks, NV

NEW HAMPSHIRE
Gazda, Robert J. — Newmarket, NH
Holt, C. Brian — Grafton, NH
Kale, Marty — Brookline, NH
Merrill, Robert L. — Kingston, NH
Newman, Richard G. — Harrisville, NH
Wolf, Sherman M. — Amherst, NH
Yusko, Mark A. — Concord, NH

NEW JERSEY
Blair, G.H. — Marlboro, NJ
Fenwick, Daniel M. — Secaucus, NJ
Karsenty, Gerard — Clinton, NJ
Kaye, Melvin S. — Basking Ridge, NJ
Mills, Alan P. — Haddon Heights, NJ
Prellberg, John — Guttenberg, NJ
Stoeber, Bernhard W. — Glen Rock, NJ
Weber, Hans J. — Hawthorne, NJ

NEW MEXICO
Guerin, Mark — Rio Rancho, NM
Stuart, Gordon L. — Corrales, NM

NEW YORK
Ambrosino, Michael M. — Flushing, NY
Boynton, Thomas R. — Newark, NY
Buerger, John — Lewiston, NY
Cardarelli, Paul J. — Utica, NY
Castiglione, Louis — Gloversville, NY
Critelli, Karyn M. — Middletown, NY

Fass, Howard — New York, NY
Gibson, George E.M. — Flushing, NY
Hatt, Robert W. — Scotia, NY
Kucharz, Josef — Valley Stream, NY
Munoz, Washington B. — Long Island City, NY
Park, Thomas S. — West Harrison, NY
Polk, Irving — Patchogue, NY
Prasil, Anthony J.G. — Newark, NY
Schiller, Jeffrey — Long Island City, NY
Schroeger, Sidney — Scarsdale, NY
Sylvester, Amedeo — Endicott, NY

NORTH CAROLINA
Amberman, G. Herbert — Hendersonville, NC
Baerje, Guenther — Aberdeen, NC
Brown, Michael B. — Greenville, NC
Carpenter, Alice B. — Tarboro, NC
Demert, Kenneth D. — Charlotte, NC
Jakowczuk, George D. — Charlotte, NC
Moody, Robert L. — Asheville, NC
Schacht, William H. — Marshville, NC
Suther, Joe A. — Concord, NC
Taylor, Frank V. — Charlotte, NC

NORTH DAKOTA
Heilman, John J. — Rugby, ND

OHIO
Bacchus, June — Cincinnati, OH
Baker, Mark A. — Damascus, OH
Bechtol, Bruce M. — Bryan, OH
Dodds, John B. — Novelty, OH
Gaines, Mary E. — Sunbury, OH
Grochowski, David — Toledo, OH
Hanneken, Neil A. — Cincinnati, OH
Johnson, Monark — Cuyahoga Falls, OH
Kaufman, Stanley J. — Painesville, OH
Kenyon, John P. — Columbus, OH
Kocher, Norm — Columbus, OH
Laughlin, Robin G. — Sidney, OH
Little, Robert B. — Logan, OH
Lubic, James E. — Harrison, OH
McCreight, Greg — Lima, OH
Mottern, Robert A. — New Lexington, OH
Schomaker, Thomas D. — Harrison, OH
Von Blon, Larry — Bellville, OH
Wojtas, Stanislaw — Toledo, OH

OKLAHOMA
Damron, Scott — Bixby, OK
Fesler, Robert W. — Elgin, OK
Higgins, Harland — Coweta, OK
Jarochowski, Wit L. — Okmulgee, OK
McMahan, Stanley — Beggs, OK
Roberts, Mike — Ada, OK

OREGON
Carlson, Gerald L. — The Dalles, OR
Thomas, Stephen P. — Portland, OR

PENNSYLVANIA
Baker, Harry G. — Mechanicsburg, PA
Barkhymer, David J. — Johnstown, PA
Botterbusch, Daniel E. — Fairfield, PA
Christman, Robert L. — Pottstown, PA
Flower, Tim — Pittsburgh, PA
Gross, A. Jay — Pittsburgh, PA
Jones, George — State College, PA
Kalter, Samuel — Philadelphia, PA
Kaplan, Alan — Drexel Hill, PA
Kistler, John M. — Lehighton, PA
Layos, Elias C. — Philadelphia, PA
Meiklejohn, Daniel — Jamison, PA
Mills, John A. — Pittsburgh, PA
Pugh, Roy A. — Newtown, PA
Rambo, Isobel — Pequea, PA
Rosen, Stanley — Philadelphia, PA
Salomon, Erich E. — Allentown, PA
Scriniere, Michael — Souderton, PA
Servinsky, Larry — Cresson, PA
Shade, Faron L. — Allentown, PA
Stiber, Jerry — Bensalem, PA
Szalai, Imre A. — Frederick, PA
Theis, Thomas L. — New Stanton, PA
Whittle, Peter — Wayne, PA
Zimmerman, James K. — York, PA

PUERTO RICO
Martinez, Juan E. — Sabana Grande, PR

RHODE ISLAND
Metheny, Robert L. — Providence, RI
Silvia, Lawrence — Middletown, RI

SOUTH CAROLINA
Davis, James M. — Seneca, SC
Trost, Terry C. — Myrtle Beach, SC

SOUTH DAKOTA
Diekman, Paul — Big Stone City, SD
Hoffman, Randy C. — Brandon, SD
Kaiser, Richard — Pierre, SD

TENNESSEE
Ball, William T. — Dyersburg, TN
Cable, John H. — Maryville, TN
Duckett, Kermit E. — Knoxville, TN
Fuson, Robert N. — Nashville, TN
Kurz, George E. — Madison, TN
McKibbon, Douglas R. — Etowah, TN
Robbins, Don A. — Sweetwater, TN
Sliger, Gene S. — Athens, TN
Smith, William R. — Powell, TN

TEXAS
Arias, Heriberto — Houston, TX
Beckman, T. R. — Burleson, TX
Buser, Peter — Houston, TX
Dewey, Mike — Amarillo, TX
Ennis, Floyd A. — Lewisville, TX
Gonzales, Nino — Austin, TX
Grantham, C.H. — Odessa, TX
Grisham, Marybess H. — Dallas, TX
Herpick, William H. — Corpus Christi, TX
Hubby, John S. — The Woodlands, TX
Jolly, Glyn — Victoria, TX
Jones, Earl W. — San Antonio, TX
Kiser, Gerald W. — San Antonio, TX
Larson, Robert A. — Austin, TX
Lemaster, John — Amarillo, TX
Martin, Leland M. — Harlingen, TX
Minton, Clay L. — Blossom, TX
Nesrsta, David — Alvin, TX
Peoples, Bill M. — Fort Worth, TX
Sanford, Calvin W. — Abilene, TX
Smith, William F. — Austin, TX
Velazquez, Juan F. — McAllen, TX
Whiteman, James C. — Magnolia, TX
Young, Billy E. — Dallas, TX

UTAH
Reymond, Jacques M. — Salt Lake City, UT

VERMONT
Hughes, Hayden A. — Castleton, VT

VIRGINIA
Akers, Mike — Pearisburg, VA
Alave, Guido C. — Vienna, VA
Bishop, Roger L. — Goodview, VA
Creasey, Mike D. — Chesterfield, VA
Elswick, R.K. — Cumberland, VA
Fletcher, James N. — Virginia Beach, VA
Halter, Steven L. — Alexandria, VA
Holman, Vern L. — Newport News, VA
Lasser, Howard G. — Springfield, VA
Nilagate, Pom — Richmond, VA
Williams, Seaford — Virginia Beach, VA
Yarbrough, Jesse D. — Ridgeway, VA

WASHINGTON
Boyett, Brian — Seattle, WA
Combs, Michael — College Place, WA
Door, Jim — Kennewick, WA
Evans, William K. — Tacoma, WA
Grieff, Jeff — Seattle, WA
Payne, Thomas M. — Seattle, WA
Randell, J.C. — Spokane Valley, WA
Stullick, Ray — Olympia, WA

WEST VIRGINIA
Bond, Joseph P. — Charleston, WV

WISCONSIN
Bartelt, Jeffrey D. — Oshkosh, WI
Curtin, W.J. — Milwaukee, WI
Draeb, George W. — Sturgeon Bay, WI
Fennern, Donald E. — Baldwin, WI
Gruening, Craig R. — Fond Du Lac, WI
Husar, Marvin J. — West Bend, WI
Karas, Raymond P. — Madison, WI
Kohn, Edward T. — Milwaukee, WI
Krueger, Gerald W. — Fort Atkinson, WI
Nechvatal, Melvin M. — Lancaster, WI
Peterson, Ronald N. — Merrill, WI
Polk, Henry M. — Milwaukee, WI
Robbins, Jack R. — Mondovi, WI
Seidl, Arthur E. — Wausau, WI
Wiederhold, Anton J. — Cudahy, WI

WYOMING
Hedine, A. David — Cheyenne, WY

CANADA
Anderson, R.J. — Osoyoos, BC
Beckner, David C. — Bridgetown, NS
Benson, Daniel — Toronto, ON
Eng, W. — Vancouver, BC
Francis, Thomas D. — Halifax, NS
Gergely, Stephen — Moncton, NB
Hooper, Danny H. — Bowmanville, ON
LeBlanc, Telex — St. Antoine Sud, NB
Lin, James J.M. — Willowdale, ON
Matsui, Dave — Toronto, ON
Moczko, Stan — Windsor, ON
Nyenhuis, Hess — St. Albert, AB
Powers, Rodolphe T. — Grand Falls, NB
Schenker, Steven — Ottawa, ON
Shivprasad, Jairaj — Toronto, ON
Taing, Keo — Orleans, ON
Thibault, Andre — Campbell, BC
Venema, Ph. — Watford, ON
Waytena, Robert — Ft. Erie, ON

INTERNATIONAL
Brereton, Dennis H. — New South Wales, Australia
Bush, Floyd A. — Norrtalje, Sweden
Daniels, George — Ramsey, Isle of Man
Gazeley, Albert E. — Cambridge, United Kingdom
Goodhue, Alex Edward — Whangarei, New Zealand
Greipl, Henrich — Byford, Australia
Healy, Roger G. — Queenstown, New Zealand
Laurent, Paul J. — Qld, Australia
Liu Man Hoo, Raymond — Shatin N.T., Hong Kong
Mayersdorf, Assa — Haifa, Israel
McAuliffe, Robert — Dunedin Otago 9001, New Zealand
Moys, Terry A. — Wairoa, Hawkes Bay, New Zealand
Robinson, Ross S. — NSW, Australia
Sallaberry, George Enrique — Buenos Aires, Argentina
Trummer, Juan Adolfo — Buenos Aires, Argentina
Winter, Bruce — Victoria, Australia

Next month we will recognize those members in the 10-19 year category.

The

American Watch Guild

announces

the creation of the



International Watch Collectors Society

The **Society** will provide its members with the following

- Calendar of major watch sales & auctions.
  Antiquorum, Christie's, Phillips & Sotheby's
  The previews of upcoming auctions.
  Reports: photographs, prices and auction results.
- Announcements from significant watch firms of new releases and limited editions.
- Information about emerging new master watchmakers and their creations
- Establishment of regional chapters where the collectors can meet and have guest speakers from noteworthy watchmaking factories.
- Question and Answer service by Stewart Unger, noted watch authority & author.
- Annual meeting at the Concours d'Elegance at the summer Jewelers of America Show held at the Javits Center in New York.
- A book club.
- Plus Free Booklets: *How to Buy a Watch (and its Functions)*
  The Care and Service of Timepieces
  Where to Find the World's Finest Watches
  How to Detect a Counterfeit Watch

Membership	1 year - $65	2 years - $120	6 Issues of Collectors Corner per year Invitation to the Concours d'Elegance
Master Collector	1 year - $120	2 years - $220	the above plus: 10% discount from the Book Club Rebate coupons from Manufacturers

Membership Application Name_____ Phone_____

Address_____ City_____ State_____ Zip:_____

Make check payable to: **International Watch Collectors Society, LLC**

244 Madison Ave., #258 New York, NY 10016 • Fax: 516-374-5060

Classified Advertising Regulations & Rates

Ads are payable in advance $1.00 per word, $1.10 per word in **bold** type. Classified display ads are $45.00 per column inch, 2¼" wide. Classified ads are not commissionable or discountable. Payment can be made by check, VISA, MasterCard, Discover, Diner's or American Express. The publisher may, at the publisher's sole discretion and for any reason and without notice, decline to publish or republish any ad, in which case any fees submitted or paid for such ads shall be returned or rebated to the advertiser. The publisher reserves the right to edit all copy. Price lists of services will not be accepted. Confidential ads are $15.00 additional for postage and handling. The first of the month is issue date. Copy must be received 30 days in advance (October issue closes for copy on September 1st).

HOROLOGICAL TIMES
701 Enterprise Drive
Harrison, OH 45030
Toll Free 866-367-2924, ext. 307
Phone (513) 367-9800
Fax (513) 367-1414
E-mail: dbaas@awci.com
www.awci.com

TRADESMAN

HAMILTON ELECTRIC WATCH REPAIR
Expert, experienced service on all Hamilton 500 and 505 Electric watches. Hamilton electric watches and parts always wanted. René Rondeau, P.O. Box 391, Corte Madera, CA 94976. Tel: (415) 924-6534. E-mail: rene@hamiltonwristwatch.com

DIAL REFINISHING



BEFORE AFTER

Quartz Conversions
Diamond Dial Conversions
Emblem & Name Personalization

Write for Brochures
INTERNATIONAL DIAL CO., INC.
58 W. SUGARTREE
P.O. BOX 970
WILMINGTON, OH 45177
(937) 382-4535

DENNIS KAYE
108 Corgy Drive • Cary, NC 27513
888-363-9510
Porcelain Dial Restoration
Watch • Pocket Watch • Clock
Platform Escapement Repair
Atmos Parts & Service
400-Day Clock Repair
Kundo Coil/Electric Clock Service
Prompt Reliable Service . . . Guaranteed
Call Us or Visit dialrepair.com

Swiss Watch Repair Service to the Trade
Contact 1-800-735-2090 or
www.chronographsmaster.com

FENDLEY & COX
WHEEL AND PINION SPECIALIST
1530 Etain Rd., Irving, TX 75060
RICHARD COX 972-986-7698
CMC, FNAWCC, CMBHI
www.fendley-cox.com

POCKET WATCH &
MARINE CHRONOMETER REPAIR
General repair and restoration of antique and complicated watches. Custom parts fabrication including staffs, verge staffs, stems, levers, and springs. Located in Massachusetts. Matt Henning, CW (413) 549-1950; www.henningwatches.com

REPIVOTING - WRIST & POCKET WATCHES
Custom made pivots for balance staffs, arbors, pinions. No part too small. Balance staffs and arbors made to factory standards. 40 years experience. Juliusz Dabrowski, J.D.Watchworks 210 Post St., Suite 506, San Francisco, CA 94108; (415) 397-0310; jd@jdwatchworks.com

CLOCK , MUSIC BOX MAINSPRINGS, GEAR PINION CUTTERS, MATERIAL & PARTS CUSTOM MADE. **TANI** ENGINEERING, 1852 State Route 44, Atwater, OH 44201; (330) 325-0645. E-mail: waldencroft@peoplepc.com

ATMOS
Service/Repair
Warranty 2 Years Parts & Labor
800-837-1545
Clockmaster, Inc. – Robert Good
2537 So. Brentwood Blvd.
St. Louis, Missouri 63144

CLOCK GEARS, BARRELS and **PINIONS** made from your sample, **ARBORS** re-pivoted, teeth replaced in gears or barrels. All work guaranteed, fair prices fast turn around. Call Mike Loebbaka, 86 Mullens Lane, Saugerties, NY 12477; Phone: 800-411-4542, tictoc@oldandnew.com

ELECTRONIC INSTRUMENT SERVICE
We are Factory Authorized Service for:
• **VIBROGRAF & PORTESCAP**
• **TICK-O-PRINT & L&R**
We service all makes of ultrasonics, all makes of watch rate recorders, and related equipment. 25 years experience.
190 Deepstone Drive San Rafael, CA 94903
Used Equipment Bought & Sold
VISA
For Information
(415) 453-9266

MORGAN PIVOT POLISHER
POLISH PIVOTS IN AS LITTLE AS 5-7 SEC.
FITS SHERLINE, MOST WATCHMAKERS & ENGINE LATHES.
MORGAN CLOCK CO.
800-806-2220 9-5 CST
MORGANPIVOTPOLISHER.COM



ATMOS by Jaeger-LeCoultre
Completely overhauled with the longest labor warranty on the planet! Five years on all labor!
Mike's Clock Clinic
Established in 1982 & devoted exclusively to the Atmos since 1990. I also overhaul 400-day clocks.
Please call **877-286-6762**
http://www.atmos-man.com/atmos.html

VINTAGE POCKET WATCH RESTORATION. Twenty-eight years experience, guarantee, free estimates. The Escapement, P.O. Box 522, Pooler, GA 31322; (912) 330-0866

DIAL REFINISHING CO. FAST SERVICE, FINEST QUALITY, quantity works welcome. Specialize on changing dial feet positions to fit the quartz movement. Send your works to: **KIRK DIAL OF SEATTLE,** 112 Central Avenue North, Kent, WA 98032; (253) 852-5125

ARTICLES FOR SALE

STUCK FOR A MOVEMENT?
or a watch part? Call Don Kroker's Watch Movements. (559) 229-8423 or write 4325 No. 5th St., Fresno, CA 93726.

HAMILTON ORIGINAL MILITARY MATERIAL
Supplying original factory material for the Hamilton Model 21 Chronometer, Model 22 Deck Watch & Military 16 Size Watch Models 23, 3992B, 4992B and 2974B As well as much material for the 950B & 992B Railroad Watches.
LARRY CRUTSINGER
P.O. Box 8514 Norfolk, VA 23503
757-650-9470 E-mail: detent21@aol.com
www.militarywatchmuseum.com

FULLY WARRANTEED
Watch Timers & Cleaners



FACTORY REBUILT WATCH TESTING EQUIPMENT
Call or Write for details:
Tel: (516) 437-8700
Fax: (516) 437-8708
VIBROGRAF U.S.A. CORP.
504 Cherry Lane, Floral Park, NY 11001
www.vibrografusa.com

Watch Repair Tools & Supplies
Clock Repair Tools & Supplies...
for American and European clocks of all types!
Horological Repair and Refernce Books
Browse through our inventory and order on-line 24-hours a day! ...
www.merritts.com
Our new 2006-2007 Catalog of Parts and Repair Supplies will be available approx. May 1, 2006
Write for your copy today!
...$3.00 postpd.
MERRITT'S CLOCK & WATCH REPAIR SUPPLY DEPARTMENT
1860 Weavertown Rd,
Douglassville, PA 19518
610-689-9541 FAX: 610-689-0567

Clockmaking & Modelmaking Books, Videos & DVDs by W. R. Smith, 8049 Camberley Drive, Powell, TN 37849. Phone 865-947-9671; E-mail: WRSmith2@aol.com

***The Original* Troop-Balas Labs**
Silcon-7® Sealant $5.95
One-Dip Solution® $5.95
Crystal-Kleer® Rouge $6.50
KT-22 Microlubricant® $3.50
www.troop-balas.com
800-423-3294

DASHTO INC./TOM MISTER
PO Box 61894
Virginia Beach, VA 23466
http://www.dashto.com
Huge and everchanging selection
Used and new horological items
Sold by internet list only
TOOLS/EQUIPMENT
MATERIAL ASSTS/PARTS
POCKET/WRISTWATCHES
WATCH MOVEMENTS
WATCH CASES & DIALS
WATCH BRACELETS/BUCKLES
MUCH MORE
WE BUY & TRADE ALSO
tom@dashto.com
http://dashto.org

Regula and H. Herr Cuckoo Movements
Complete selection. Also factory stopper new Hermle, Urgos, and Kieninger at 60% OFF our regular wholesale prices. Call Butterworth 1-800-258-5418.

Order On Line 24/7



We inventory over 8,500 items. Keys, pendulums, Atmos style suspension springs, Russian submarine platform escapements, Golden Hour material, Historic Timekeepers cleaning solution and more!

Timesavers
Box 12700 • Scottsdale, AZ 85267 • USA
Phone: 480-483-3711 • Fax:480-483-6116
info@timesavers.com • www.timesavers.com
164 page Catalog #33 illustrating 1,000's of clock repair parts is only $3 postpaid worldwide.

DOCTOR'S WATCHES - beautiful German design, Swiss mechanical ETA movement, good price. Contact Mark Butterworth for info at (800) 258-5418 or bci@muscanet.com

HOROLOGICAL TOURS

3 CONTINENTS
HOROLOGY STUDY CRUISE
OUR 5TH CRUISE AND SEMINAR, TAKES US TO **BARCELONA** (CLOCK MUSEUM, PITA WATCHES - AHCI) AND A TRANSATLANTIC CRUISE CALLING AT **MALAGA** (GRANADA) **GIBRALTAR** (TREMENDOUS WATCH BARGAINS) **TANGIER** (ANTIQUE MARKETS) **CASABLANCA (MARAKESH), AGADIR, LANZAROTE, TENERIFE, SANTA CRUZ, MIAMI**. SEMINARS AT SEA - PRESENTATIONS ABOUT **HOROLOGY, MECHANICAL MUSIC, AUTOMATA, HISTORY OF SCIENCE, SCIENTIFIC INSTRUMENTS.** DEC 3-20, 2007. FROM $3,100.00. BROCHURE? 1-800-262-4284 OR atc@warwick.net

BUSINESS FOR SALE

JEWELRY STORE - MARYLAND
Established more than 35 years at the same location. Low rent, long lease. Open 5 days/ week last 19 years. Excellent opportunity for watchmaker or jeweler. Net profit $120,000-$150,000. Bank statement, tax return and cash income will be shown. Inventory (at cost) and location - $285,000-$300,000. Contact Lou: (301) 423-5959 or cell (240) 731-8240.

Master Watchmaker Retiring
Upscale Watch Repair &
Retail Sales Business
Established over 25 years ago on Hilton Head Island; one of the best tourist areas and wealthiest development areas in South Carolina. Our business is well established with the majority of our business in Rolex and other high-end watch brand repair and sales. Numerous opportunities daily for Rolex, Patek, Cartier and other fine watch repairs. Our store is located in a prime shopping center in a high traffic area. Beautiful, professional designed showroom, separate spacious rear work benches for repairs with showroom visibility. A large inventory valued at approximately $450,000.00 in watches, clocks, tools and repair parts will be include in sale. Call Peter D. Baier, CMW, Owner at (843) 842-9500 for details or you may email the owner at: peter@swisstimezone.com

COLORADO'S BEST CLOCK & WATCH STORE IS FOR SALE
Owner wants to retire. Our strip center has a new face lift and is located across from a nationally acclaimed shopping complex with shops, restaurants, theater, bowling, ice skating, arts, lots of events; over 1300 residences, over 1 million square feet of retail and 800 thousand feet of office space. These people see our sign daily. Close to mountains, fishing, skiing, gambling, camping, hiking and more. This store has a great reputation, and is well known in the community. We have been at this location over 22 years. Owner will carry some flexible financing and help new owner with transition. Our Watchmaker of over 20 years will stay on. We have a clean inventory. Jewelry and jewelry service can be added to further enhance this great store, even more potential with all the new development in the area. We average 30 to 60 customers in our store daily. We are asking $225,000 for this great store, plus cost of inventory. For more information call (720) 236-7567 days, (303) 989-0188 evenings.

WANTED

Can you help me build a complex "orrery" (model of the solar system)? contact: **paul.piculell@target.com**

Classified Ads

HELP WANTED

JAMES FREE
JEWELERS
SINCE 1940

WATCHMAKER

James Free Jewelers, one of Couture Jeweler's top independent retailers, located in Ohio, is seeking an experienced watchmaker with Rolex training. James Free Jewelers features Rolex, Breitling, Patek Philippe, Cartier, Omega, Tag Heuer, Baume & Mercier, Raymond Weil, and more. Focus will be on mechanical, automatic timepieces. We have a full Customer Service support staff, full time polisher, state of the art facilities with the latest equipment, and a knowledgeable staff. We offer competitive benefits. Please contact

General Manager, Michael Bohner
mbohner@jamesfree.com
937-298-0171

SEEKING WATCHMAKER
FULL TIME
ATLANTA, GA
(678) 779-6783

Full-Time Watchmaker

Looking to hire full-time watchmaker for in-store service dept. Proficiency in quartz and mechanical timepieces a must. Location is an Authorized Rolex, Tissot, Swiss Army and Swatch dealer. Justice Jewelers is an EOE with two locations in the mid-west. Benefits include health insurance, 2 week paid vacation and flexible work schedule. Email response or resume to:

MSanger@JusticeJewelers.com

SITUATIONS WANTED

30+years experianced watchmaker seeks employment in the indiana/indianapolis area. (616) 455-6138.

Experienced English watchmaker. British Horological Institute certified. Has Rolex and Omega training, seeks employment in Florida with top quality company. Reply to BOX SW42005, c/o Horological Times, 701 Enterprise Drive, Harrison, OH 45030.

Watchmaker seeking employment. Experience includes Cartier and Chelsea Clocks. Please reply to: Box SW112006, c/o *Horological Times*, 701 Enterprise Drive, Harrison, OH 45030.

Clockmaker, college trained, 18 years experience, seeking employment. Reply to Box SW22006, c/o *Horological Times*, 701 Enterprise Drive, Harrison, OH 45030.

WANTED TO BUY

WANTED WATCH BOXES
Buy - Sell - Trade
We want most major brands. Also buying high-end jewelry brand boxes. **Doug Giard, 586-774-3684**

We pay up to 97% of market for karat gold scrap (any amount)! Also, buy filings, gold fill, sweeps, silver, platinum! Immediate 24-hour payment return mail! Ship insured/registered mail to: AMERICAN METALS COMPANY, 253 King St., Dept. HT, Charleston, SC 29401. Established 1960. Phone (843) 722-2073

$$WANTED ANYTHING$$
Rolex - Cartier - Patek - Breitling
Panerai - Le Coultre
Vacheron - AP - Etc.
Watches, Boxes, Dials, Links, Parts, Bands, Movements, Crystals, Bezels, Crowns, Clocks, Signs, Posters, Catalogs, Instruction Books, Polish Cloths, Wallets, Hats, Shirts, Promo Items, ANYTHING! **Doug Giard, 586-774-3684**

WATCH MATERIAL DISTRIBUTORS
Please call us if you are interested in selling your business.
All replies confidential.
Contact Pat Cassedy
Cas-Ker 1-800-487-0408





We also fit glass crystals to Openface, Hunting, and English chain drive watches. Complete watches, dials, movements, case springs for sale.

G F Specialties
1-800-351-6926
P.O. Box 2332
Sanford, FL 32772

Chronograph movements, cases, dials, parts and watches. Paying: Valjoux 72 - $300.00; Venus 178 - $300.00; Longines 13ZN - $500.00; Valjoux 69 - $350.00; also Rolex 620 NA - $350.00. Dean Sarnelle, 25 W Beverley St., Staunton, VA 24401; 1-866-877-8164.

WATCH BUCKLES WANTED
I will buy your signed wrist watch buckles from any company in gold, gold filled, stainless steel or silver. 1-1000. Randy Chapin 831-246-0945 or email to horology@cruzio.com

WE BUY WATCHES
Rolex, Patek, Cartier, LeCoultre, Vacheron, Breitling, Audemars, Tudor and others. Modern or Vintage. **Doug Giard, 586-774-3684**

WE BUY ENTIRE WATCH COLLECTIONS

Call Toll Free
1-800-426-2344
203-366-2500



Ron Fried, President
"I look forward to giving you honest and reliable service."

SPECIALTY METALS REFINING COMPANY, INC.
1915 Black Rock Turnpike
Fairfield, CT 06430

Members:
Better Business Bureau
Jewelers Board of Trade

261 Consecutive Ads

SCHOOLS

YOUR FUTURE NEVER LOOKED BETTER



Study the Art of Swiss Watchmaking in a Comprehensive 2-Year Program

It's time to invest in a career for a lifetime. The growth of the luxury watch market has created job opportunities for qualified watchmakers throughout the United States. Your career potential is unlimited due to the current and future need for watchmakers. Learn in an environment that combines old world craftsmanship with state of the art techniques and equipment.

Now is the time to request an application for the 2-year training program. The full-time WOSTEP (Watchmakers of Switzerland Training and Education Program)-based curriculum is designed to train and certify graduates for a fulfilling career in the watchmaking profession. The WOSTEP program is available at the partnership schools listed below. Programs start in September in both Lititz and Seattle, and in January in Okmulgee and Saint Paul. Please write to the Admissions office or request an application by telephone or email:

Lititz Watch Technicum
1 Wynfield Drive • Lititz, PA 17543
(717) 625-3787
info@lititzwatchtechnicum.org

Saint Paul College Watchmaking Program
235 Marshall Avenue • Saint Paul, MN 55102
(651) 846-1408
www.saintpaul.edu

North Seattle Community College
Watch Technology Institute
9600 College Way North • Seattle, WA 98103
(206) 526-0169
WTI@sccd.ctc.edu

Oklahoma State University Okmulgee
Watchmaking and Microtechnology
1801 E. 4th Street • Okmulgee, OK 74447
(918) 293-4703
www.osu-okmulgee.edu/watch/

ATTENTION RETIRED WATCHMAKERS
Call us before you sell your parts, tools, and watches. We have helped over 175 watchmakers in the last eight years to dispose of their accumulations. When you're really ready to sell, we're ready to buy! Phone (229) 928-9092 or (727) 327-3306. Ask for Jeff or Nancy. E-mail: jeffnancy@mchsi.com

Advertisers' Index

Borel & Co., Jules 5
(816) 421-6110

Butterworth Clocks, Inc. 29
(800) 258-5418

Cas-Ker Co. 15
(513) 674-7700

Chronos/WCR 27
(303) 296-1600

Clocks 13
011 44 131 331 3200

Eckcells 9
(800) 514-1270

Energizer 7
(314) 985-1637

Ferrell & Company 25
(213) 627-6031

Frei, Otto 19
(510) 832-0355

HPS Companies 17
(866) 655-3155

International Watch Collectors Society 43
(516) 374-5060

Livesay's, Inc. 29
(813) 229-2715

Maxell Corp. ..... inside front cover
(201) 794-5900

Renata ..... back cover
(214) 351-0380

Seiko Instruments USA, Inc. ..... inside back cover
(513) 674-7700

Smith Supply House 23
(213) 622-1687

Twin City Supply 21
(952) 545-2725

Vibrograf U.S.A. Corp. 11
(516) 437-8700

Zantech 31
(800) 441-7569

Horological Times Advertising Policy

The publisher reserves the right to approve all advertising copy and reject any advertisements not in keeping with the publisher's standards. The publisher may, at the publisher's sole discretion and for any reason and without notice, decline to publish or republish any ad, in which case any fees submitted or paid for such ads shall be returned or rebated to the advertiser. The publisher reserves the right to edit all copy. The advertiser and/or agency agree to assume liability for all content of advertisements printed. They will also accept responsibility for any claims or suits arising therefrom brought against the publisher.

AWCI Staff Directory

James E. Lubic, CMW21
Executive Director
Education & Technical Director
1-866-367-2924 ext. 310
jlubic@awci.com

Lucy Fuleki
Assistant Executive Director
1-866-367-2924 ext. 304
lfuleki@awci.com

Thomas J. Pack, CPA
Finance Director
1-866-367-2924 ext. 311
tpack@awci.com

Manuel Yazijian, CMW21
Watchmaking Instructor/Certification Coordinator
1-866-367-2924 ext. 309
myazijian@awci.com

Laurie Penman
Clock Instructor
1-866-367-2924 ext. 318
lpenman@awci.com

Donna K. Baas
Managing Editor/Advertising Manager
1-866-367-2924 ext. 307
dbaas@awci.com

Nancy L. Wellmann
Education Coordinator
1-866-367-2924 ext. 303
nwellmann@awci.com

Sharon McManus
Membership Coordinator
1-866-367-2924 ext. 302
smcmanus@awci.com

Heather Weaver
Receptionist/Technical Support
1-866-367-2924 ext. 301
hweaver@awci.com

Jim Meyer
IT Director
1-866-367-2924 ext. 323
jmeyer@awci.com

American Watchmakers-Clockmakers Institute
701 Enterprise Drive
Harrison, OH 45030
Phone: Toll Free 866-FOR-AWCI (367-2924)
(513) 367-9800
Fax: (513) 367-1414
E-mail: awci@awci.com
Website: www.awci.com
Office Hours: 8:00 to 5:00 (EST) Mon-Fri

SII

SEIZAIKEN®

MADE IN JAPAN



The brand used by Japan's most experienced watch maker

SII Micro Parts Ltd.
13F ARCACENTRAL, 1-2-1, Kinshi Sumida-ku,
Tokyo 130-0013, Japan
Telephone: +81-3-5819-8021 Facsimile: +81-3-5819-8020
www.siimp.co.jp

Seiko Instruments USA Inc.
2990 Lomita Boulevard
Torrance, California 90505-5102
Telephone: (310) 517-7771 Facsimile: (310) 517-7792
www.siielectroniccomponents.com

The choice of the 21st century watchmaker.



renata

swiss made watch batteries

Several hundred million times a year the world's finest watch companies and professional watchmakers rely on Renata for uncompromising quality, so can you.

Both high and low drain batteries available for optimal performance.
Superior Swiss quality. Freshness dated.

A. COHEN COMPANY

www.acohencompany.com 800.920.7095 333 Washington Street #501 Boston, MA 02108

Your Authorized Full-Line Renata Distributor